ASSOCIATION OF AMERICAN RAILROADS

BUREAU OF EXPLOSIVES SAFE TRANSPORTATION NORTH AMERICA

Third Edition

Field Guide To Tank Cars

INSIDE COVER

FIELD GUIDE TO TANK CARS

Compiled by Allen D. Maty (Ret.), Chief Inspector, Bureau of Explosives

Issued by:

Association of American Railroads/Bureau of Explosives
425 Third Street, SW Suite 1000
Washington, DC 20024
Andy Elkins
AElkins@aar.org
Telephone: 202/639-2100
Web site: *www.aar.org*

Printed in the United States of America
Copyright © 2017 by the Association of American Railroads, all rights reserved,
Third Edition (February 6, 2017)
Later Editions will supersede this document.

Do not alter.
Do not copy or distribute without express authorization from AAR.
Not for sale or re-publication.

Acknowledgements

The Association of American Railroads and the Bureau of Explosives gratefully acknowledge the assistance of GATX Corporation, Midland Manufacturing Company, UTLX Manufacturing, Trinity Industries, Inc., Chart Industries, The Chlorine Institute, Railway Association of Canada, Veolia North America, Salco Products, Transquip USA, Kelso Technologies, Inc., Canadian National Railway, Kansas City Southern Railway, and Norfolk Southern Railway Company for granting us permission to use their tank car drawings and photographs.

We also wish to thank Sam Chapman, Charles Wright, Patrick Student, Paul Williams, and William Oertly for their critical review and/or comments in the previous editions of the Field Guide. Without their help, the initial publication would not have been possible.

The Bureau of Explosives wishes to acknowledge the following individuals for their assistance in preparing this edition of Field Guide to Tank Cars: Andy Ash (Railway Association of Canada), Patrick Brady (BNSF Railway), Anthony Ippolito (Canadian National Railway), Jim Kozey (Canadian Pacific Railway) Robyn Kinsley (The Chlorine Institute), Allen Maty (Bureau of Explosives (Ret.)), Tim O'Brien (Union Pacific Railroad), Steve McNealy (Kansas City Southern Railway), N. Scott Murray (ExxonMobil Chemical Company), Allen Richter (Conrail), Glen Rudner (Norfolk Southern Railway Company), Lane Sekavec (Union Pacific Railroad), Paul Williams (Norfolk Southern Railway Company), and Charles Wright (Union Pacific Railroad (Ret.)).

Dedication

Field Guide to Tank Cars is dedicated to the memory of:

Mr. Roy J. Holden
(1921–1989)
Engineer, Technical Services
Bureau of Explosives
Association of American Railroads

"Uncle Roy" was a pioneer in the development of tank car damage assessment techniques. His wit, wisdom, experience and dedication to tank car safety are sorely missed.

Page intentionally left blank.

Table of Contents

Introduction 1
Section 1: Tank Car Classification and Specifications 5
Section 2: Tank Car Safety Systems 13
Section 3: Tank Car Stenciling and Markings 21
Section 4: Nonpressure Tank Cars 29
Section 5: Pressure Tank Cars 69
Section 6: Cryogenic Liquid Tank Cars 91
Section 7: Guidelines for Initial Emergency Response 97
Section 8: Glossary of Railroad and Tank Car Terms 105
Annex A: AAR, U.S. DOT, and Transport Canada Safety Enhancements for Nonpressure Tank Cars 119

List of Illustrations and Photographs

Specification: DOT-111A100ALW1 6
Nonpressure Tank Car Designator Table 11
Rail Car Orientation Diagram..... 12
Double-Shelf Couplers 13
Identification Plate 23
Variable ID Plate 23
Tank Car Qualification Stencil 25
Typical Remote Monitoring Devices 27
Location of Key Stenciling 28
DOT/TC-111A100W1 Tank Car for Alcohol and Methanol Service 35
Top Operating Platform for Nonpressure Tank Cars (Post 1982) 36
DOT-111A100W2 Tank Car for Sulfuric Acid Service 37
Loading and Unloading Arrangement and Top Operating Platform for
Sulfuric Acid Cars 38

DOT/TC-111A100W5 (Rubber Lined) Tank Car for Hydrochloric Acid Service 39
Loading and Unloading Arrangement for DOT-111A100W5 (Rubber Lined) Cars 40
Top Operated, Bottom Unloading Valves 41
Bottom Outlet with Skid Protection 42
Internal Ball Valve 43
Jamesbury and Posi-Seal Bottom External Butterfly-Type Valve 44
Typical Bottom Washout Arrangements 45
Pressure Relief Valve 46
Safety Vent 47
8 Line Interior Heater Coil, Simplex System, Connections at Bottom Outlet 48
10L 2T Serpentine Manifolded Half-Oval Outside Coil (Post 1974) 49
Sulfuric Acid Tank Car with Top Fittings Protection 50
Sodium Hydroxide Tank Car with Top Fittings Protection 51
Bottom Outlet Valve with Operating Instructions 52
Class DOT/TC-111A “CPC 1232” Tank Car for Flammable Liquid Service 53
Headshield Detail 54
DOT Specification and Qualification Stencil 54
Class DOT/TC-117 Tank Car Features 55

DOT/TC-117J100W Tank Car for Flammable Liquid Service 56
Class DOT/TC-117 Manway and Top Fittings Protective Housing 57
Class DOT/TC-117 Fittings Arrangement Inside Protective Housing 57
Class DOT/TC-117 Bottom Outlet Operating Mechanism 58
DOT/TC-117R100W Tank Car for Flammable Liquid Service 59
DOT-117R100W Specification and Qualification Stencil 60
DOT-117R100W Retrofit and Original ID Plates 60
Examples of Nonpressure Tank Car Service Equipment:
Single Bolt Manway Covers 61
Flexible Liquid Eduction Tubes 62
Safety Vents (Rupture Disc Device) and Surge Suppressors 62
Vacuum Relief Valves 63
Reclosing Pressure Relief Valves 64
“Constant Force Spring” Pressure Relief Valves 65
New-Style Bottom Outlet Valves and Operating Handles 66
Lined Fittings Manway Plates for Hydrochloric Acid Tank Cars 67
Typical 20- and 22-Inch Hydrochloric Acid Manway Fittings Arrangements 68
DOT/TC-120J200W for Flammable Liquid Service 70

DOT/TC-112J340W for Liquefied Petroleum Gas and Anhydrous Ammonia Service .. 76
Loading and Unloading Arrangement for Liquefied Petroleum Gases and Anhydrous Ammonia Service 77
DOT/TC-105S500W for Chlorine Service 78
Typical Chlorine Tank Car Fittings Arrangement 79
DOT/TC-120J200W for Flammable Liquid Service 80
Magnetic Ball Gauging Device 81
Pressure Relief Valves that May Be Found on Pressure Tank Cars 82
Fittings Arrangement for Carbon Dioxide and Nitrous Oxide Tank Cars 83
New Chlorine Tank-Within-A-Tank Design 86
Enhanced Fittings Arrangement for Chlorine Tank Cars with One Vapor Line 87
Cutaway View of Enhanced Fittings Arrangement for Chlorine Tank Cars 88
Enhanced Chlorine Fittings 89
Typical Cryogenic Liquid Tank Car (Class DOT/TC-113)..... 94
Typical Cryogenic Liquid Tank Car Fittings Compartment 95
Cryogenic Liquid Tank Car Fittings Diagram..... 96

DOT Phase-Out Dates for DOT-111 and DOT-111 CP-1232 Tank Cars in High-Hazard Flammable Train Service 122
DOT Phase-Out Dates for Non-DOT-117 Tank Cars in Class 3 (Flammable Liquids) Service *(10/1/2015)* 125
DOT Phase-Out Dates for Non-DOT-117 Tank Cars in Class 3 (Flammable Liquids) Service *(as of 8/15/2016)*..... 128
Transport Canada Phase-Out Schedule for Tank Cars Transporting (Class 3) Flammable Liquids..... 130

INTRODUCTION

Field Guide to Tank Cars is intended to be used by emergency responders and others involved with railroad tank cars. It provides information on the types, safety systems, stenciling, and markings of tank cars utilized to transport regulated (hazardous materials/dangerous goods) and nonregulated commodities.

Given the varying characteristics of the different commodities being transported and the shipper's differing needs and uses, it is impossible to cover all the various types of tank cars and fittings used. The illustrations contained in this guide are intended to provide a general overview of tank car types and typical fittings. They show the most common types of single-unit tank cars (a tank car tank mounted on, or forming part of, a railcar structure) currently used to transport both regulated (hazardous materials/dangerous goods) and nonregulated commodities.

All railroad tank cars are built to specifications, standards, and requirements established, implemented, and published by the U.S. Department of Transportation (DOT), Transport Canada (TC), and/or Association of American Railroads (AAR). These specifications, standards, and requirements address tank car design, type, and thickness of material required to be used in construction, types of fittings, welding procedures, inspection, maintenance, repair, and quality assurance system requirements.

Note: Regulatory and railroad industry specifications, standards, and requirements are contained in: U.S. DOT Title 49 Code of Federal Regulations, Parts 173 (Subpart B), 174, 179, and 180 (Subpart F); Transport Canada Transportation of Dangerous Goods Regulations (Transport Canada TDG Regulations) and Containers for the Transport of Dangerous Goods by Rail (Standard TP 14877E); and Association of American Railroads Manual of Standards and Recommended Practices (MSRP) Section C-III, Specifications for Tank Cars, Specification M-1002.

Although there are many different single-unit tank cars, they can generally be divided into three separate categories:

1. **Nonpressure tank cars** (called "general service" or "low-pressure" tank cars in the *2016 Emergency Response Guidebook*) typically transport a wide variety of liquid and solid regulated (hazardous materials/dangerous goods) as well as nonregulated commodities.

   Note: The DOT and TC regulations use the term "nonpressure" for tank cars that transport liquids and solids; however, this does not necessarily mean that nonpressure tank cars are absent of internal tank pressure. Rather, nonpressure tank cars equipped with pressure relief devices having a discharge pressure from 75 to 165 psig may have a build-up of internal tank pressure. Therefore, caution should still be given when handling these tank cars.

2. **Pressure tank cars** are built with thicker tanks to withstand higher internal pressures, making them stronger than a nonpressure tank car. They typically transport liquefied compressed gases, poison/toxic inhalation hazard (PIH/TIH) materials, reactive materials, and/or some corrosive materials.

3. **Cryogenic liquid tank cars** are vacuum-insulated with an inner container (tank) and carbon steel outer shell (tank, not jacket). They transport refrigerated (extremely cold) liquefied gases having a boiling point colder than minus 130°F at atmospheric pressure, such as liquid hydrogen, ethylene, oxygen, nitrogen, and argon.

The *Field Guide to Tank Cars* is divided into eight sections and an annex*:*

Section 1: Tank Car Classification and Specifications
Explains the various DOT, TC, and AAR tank car classes and specifications.

Section 2: Tank Car Safety Systems
Describes the various pressure relief devices (PRDs) and other safety systems applied to protect the tank.

Section 3: Tank Car Stenciling and Markings
Provides information on various stenciling/ markings required on tank cars by DOT, TC, and AAR.

Section 4: Nonpressure Tank Cars
Describes the most common tank cars currently used to transport both liquid and solid regulated (hazardous materials/dangerous goods) and nonregulated commodities. This section also describes typical types of top and bottom valve and fittings arrangements with which these cars may be equipped.

Section 5: Pressure Tank Cars
Describes the tank cars currently used to transport liquefied compressed gases under pressure, as well as some low-pressure, high-hazard materials, such as PIH/TIH materials, that may require the additional protection of a stronger tank car.

Section 6: Cryogenic Liquid Tank Cars
Describes the tank cars currently used to transport cryogenic liquids, such as argon.

Section 7: Guidelines for Initial Emergency Response
Provides general guidance when approaching an incident involving tank cars in transportation. It also provides information on assessing damage to tank cars. This damage assessment information is presented to familiarize emergency responders with techniques used by trained and experienced

professionals in analyzing and handling tank problems. It is not intended to replace on-scene judgment.

Section 8: Glossary of Railroad and Tank Car Terms

Provides emergency responders and others involved with tank cars with some of the terminology associated with tank cars.

Annex A: AAR, U.S. DOT, and Transport Canada Safety Enhancements for Nonpressure Tank Cars

Provides a detailed explanation of recent changes for nonpressure tank cars.

SECTION 1: TANK CAR CLASSIFICATION AND SPECIFICATIONS

DOT, TC, and the AAR have established specifications for the design, construction, testing/qualification, repair, and maintenance of tank cars. The tank car's specification is required to be stenciled on both sides of the car. The following information defines the lettering. A sample specification appears on the next page.

Note: Transport Canada tank car specifications coincide with those of the Department of Transportation; therefore, "TC" may be substituted for "DOT" as the authorizing agency.

Current tank car specifications consist of the following information in order of presentation:

1. Authorizing agency
2. Class designation
3. Delimiter letter
4. Tank test pressure in pounds per square inch gauge (psig)
5. Material of construction when that material is other than carbon steel
6. In this position, "W" denotes fusion welding or "I" indicates use for designated PIH/TIH material
7. Fittings, linings, materials

Further explanation of this information is found on the following pages.

Specification: DOT-111A100ALW1

(1)	(2)	(3)	(4)	(5)	(6)	(7)
DOT	**111**	**A**	**100**	**AL**	**W**	**1**

(7): Fittings, Linings, Materials

(6): W — Fusion Welding or I — for certain PIH/TIH materials (See "Note", page 10)

(5): Material of Construction (other than steel)

(4): Tank Test Pressure (psig)

(3): Delimiter Letter – no significance unless J, P, R, S, or T or Class 113 A, C, or D

(2): Class Number

(1): Authorizing Agency

Components of the Specification Marking

1. **Authorizing Agency:**

   AAR – Association of American Railroads

   DOT – U.S. Department of Transportation

   TC – Transport Canada (replaced Canadian Transport Commission (CTC))

2. **Class number:** The term "class" is a three-digit number used to identify general groupings of tank cars. A "class designation" usually includes several specifications and is made up of the authorizing agency followed by the three-digit class number, such as Class DOT-111, Class TC-111, or Class AAR-211.

   Note: In this document, the letters "TC" may be substituted for "DOT" when referring to a tank car's class or specification; and, in some cases, the authorizing agency may not be shown preceding the class number (e.g., "Class DOT-111", "Class TC-111" or "Class-111").

   - **Nonpressure Tank Car Classes:**

     DOT-111: insulated or uninsulated, without an expansion dome.

     DOT-115: insulated with a carbon or alloy (stainless) steel or aluminum inner container (tank) and a carbon steel outer shell (tank, not jacket). Also referred to as a tank-within-a-tank.

     DOT-117: insulated or uninsulated carbon steel tank with jacketed thermal protection, full height head shields, and top fittings protection; a bottom outlet is optional. Additional information regarding Class-117 tank cars is contained in Section 4: Nonpressure Tank Cars.

     AAR-206: insulated with an inner container (tank) and carbon steel outer shell (tank, not jacket), similar to Class-115 tank cars. Also referred to as a tank-within-a-tank.

     AAR-211: insulated or uninsulated, without an expansion dome, similar to Class-111 tank cars.

- **Pressure Tank Car Classes:**

  DOT-105: insulated carbon or alloy (stainless) steel.

  DOT-109: insulated or uninsulated, carbon steel or aluminum.

  DOT-112: insulated or uninsulated, carbon or alloy steel.

  DOT-114: insulated or uninsulated, carbon or alloy steel.

  DOT-120: insulated carbon steel or aluminum.

- **Cryogenic Liquid* Car Classes:**

  DOT-113: vacuum insulated with an alloy (stainless) steel or nickel alloy inner container (tank) and carbon steel outer shell (tank, not jacket).

  AAR-204: vacuum insulated with an inner alloy (stainless) steel container (tank) and carbon steel outer shell (tank, not jacket). These tank cars are similar in concept to Class-113 tank cars.

---

*Cryogenic liquid is defined by U.S. 49CFR as: "A refrigerated liquefied gas having a boiling point colder than -130°F (-90°C) at atmospheric pressure". Transport Canada TP 14877E defines it as: "A refrigerated liquefied gas that is handled or transported at a temperature equal to or less than -100°C (-148°F)".

3. **Delimiter Letter:** On pressure and nonpressure tank cars, the letter A separates the class from the tank test pressure and has no meaning. However, on pressure and some nonpressure tank cars, the delimiter letter is an indicator of tank head puncture resistance and/or thermal protection systems. On cryogenic liquid tank cars, the delimiter letter indicates the authorized lading loading temperature. On Class-117 tank cars, the delimiter letter corresponds to the tank car's as constructed (J), performance (P), or retrofitted (R) status.

- **Nonpressure or Pressure Tank Cars:**

  A – no significance.

  J – equipped with a thermal protection system that is covered by a jacket and tank head puncture-resistance system.

  S – equipped with tank head puncture-resistance system.

  T – equipped with a thermal protection system that is not covered by a jacket (the thermal protection material is sprayed directly onto the tank's surface) and tank head puncture-resistance system.

- **Cryogenic Liquid Tank Cars:**

  A – authorized for minus 423°F loading.

  C – authorized for minus 260°F loading.

  D – authorized for minus 155°F loading.

- **Class-117 Tank Cars:**

  J – constructed to Class-117A specification.

  P – existing nonpressure tank car that meets performance standards for a Class-117A.

  R – existing nonpressure tank car that has been retrofitted to conform to the prescribed retrofit or Class-117A performance standards.

4. **Tank Test Pressure:** The next set of digits is the tank test pressure in psig; typically, 20 to 40 percent of the tank's burst pressure.

   For nonpressure tank cars, test pressures are specified as 60 or 100 psig; however, some manufacturers test 100-pound tanks to 165 psig, because they are equipped with 165 psig pressure relief devices (PRD), which equates to 33 percent of the tank's 500 psig burst pressure.

   For pressure tank cars, test pressures range from 100 psig to 600 psig.

   For cryogenic liquid tank cars, tank test pressures range from 60 psig to 120 psig.

5. **Material of Construction (other than steel):** The letters AL appearing after the tank test pressure indicate that the tank was constructed of aluminum. For other materials of construction, no letters or numerals are shown.

6. **Fusion Welding:** The letter W following the tank test pressure or the letters AL indicates that the tank was constructed using fusion welding. All tank cars are currently constructed using fusion welding. See "Note" below for PIH/TIH materials.

   Note*:* Tank cars built after, March 16, 2009, used for the transportation of PIH/TIH materials may have the letter "I" stenciled in place of the letter W; e.g., Specification DOT-105J500I, Specification DOT-112J500I, or Specification DOT-105J600I. The letter I may be said to indicate interim design standards for a PIH/TIH tank car. More information on these requirements is found in Section 5, Pressure Tank Cars.

7. **Fittings, Linings, and Materials:** For nonpressure tank cars, the numeral following the W will indicate the tank's material of construction, requirements for insulation or interior lining, and options for a bottom outlet or bottom washout. For tank cars constructed of aluminum, the W will be prefaced by the letters AL. Class-117 tank cars do not have a numeral following the W.

Nonpressure Tank Car Designator Table

Designator	Tank Material	Bottom Outlet	Bottom Washout
ALW1	Aluminum	Optional	Optional
ALW2	Aluminum	No	Optional
W1	Carbon Steel	Optional	Optional
W2	Carbon Steel	No	Optional
W3	Carbon Steel (Insulated)	Optional	Optional
W4	Carbon Steel (Insulated)	No	No
W5	Carbon Steel (Elastomer Lined)	No	No
W6	Alloy (Stainless) Steel	Optional	Optional
W7	Alloy (Stainless) Steel	No	No

Age/Life Limits – There is no life limit on a tank car tank if it conforms to both the federal regulations and the AAR requirements. An underframe built prior to July 1, 1974, has an AAR life limit of 40 years, unless it has received extended service status. Underframes since July 1, 1974, have an AAR life limit of 50 years.

Note: Underframes may be "continuous" or "stub sill"; refer to "Center Sill" and "Stub Sill Tank Car" in Section 8 for additional information.

Rail Car Orientation Diagram

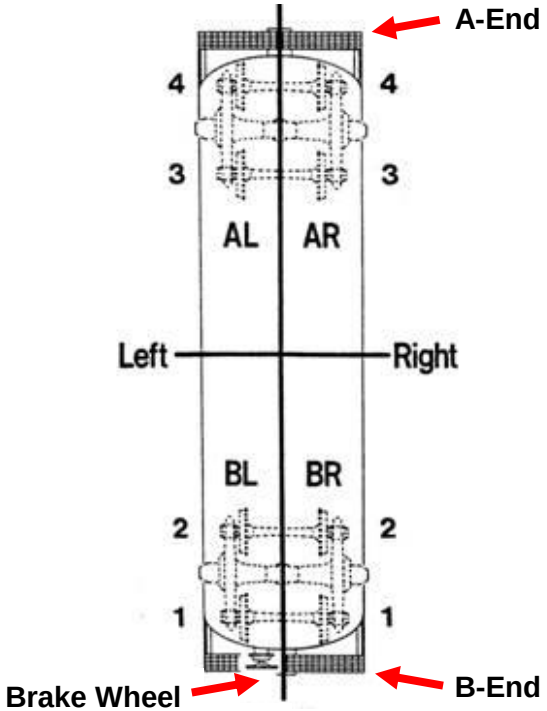

SECTION 2: TANK CAR SAFETY SYSTEMS

Tank cars are equipped with various devices and safety systems to protect the tank and fittings from damage during an accident or severe impact. These devices and safety systems, discussed below, include pressure relief devices (PRD), coupler vertical restraint systems (double-shelf couplers), tank head puncture-resistance systems (head shields), thermal (fire) protection systems, service equipment (filling, discharge, venting, safety, heating, and measuring devices), and protection systems.

Pressure Relief Devices — Per DOT regulation, single-unit tank cars transporting Division 6.1, Packing Group (PG) I and II (poisonous/toxic) materials, Class 2 (compressed gas), Class 3 (flammable liquid), and Class 4 (flammable solid, spontaneously combustible, or dangerous when wet) materials must have reclosing PRDs. However, tank cars built before January 1, 1991, and equipped with a nonreclosing PRD may be used to transport Division 6.1, PG I or II materials or Class 4 liquids, provided the materials are not poisonous (toxic) by inhalation. Refer to subsection titled "Pressure Relief Devices", page 15, for more information on PRDs.

Coupler Vertical Restraint Systems — Tank cars are equipped with double-shelf couplers. The function of the top and bottom shelves is to prevent couplers from separating in a derailment or over-speed impact, thus reducing the probability of adjacent tank car head punctures.

Double-Shelf Couplers

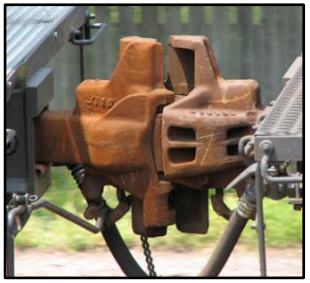

Tank Head Puncture-Resistance Systems — Tank cars transporting Class 2 (compressed gas) materials and those constructed of aluminum or nickel plate used to transport hazardous materials/dangerous goods and Class-117 tank cars must have a system capable of sustaining, without the loss of lading, coupler-to-head impacts of 18 mph. This is usually accomplished by the installation of separate head shields or full-head tank jackets made of 1/2-inch-thick steel on each end of the tank car. On some insulated tank cars (typically Class-105 pressure tank cars), head protection is accomplished by a combination of the thickness of the tank heads and the insulation system, the gauge (thickness) of the head jacket, and the stand-off distance between the jacket and the tank head, which must be proved by testing.

Thermal Protection Systems — Single-unit tank cars (except Class-113 cryogenic liquid tank cars) transporting Class 2 (compressed gas) materials and Class-117 tank cars must be equipped with a thermal protection or insulation system that provides sufficient thermal resistance so that there will be no release of any lading, except through the PRD, when subjected to a pool fire for 100 minutes or a torch fire for 30 minutes.

Bottom Discontinuity Protection Systems — Depending upon the commodity being transported and the projection distance from the shell, tank cars equipped with bottom fittings, sometimes called bottom discontinuities (including bottom outlets, bottom washouts, sumps, and blind flanges) must have these fittings protected from being sheared off or otherwise damaged in the event of a derailment or by other impact that could result in the loss of lading. Bottom fittings protection may be accomplished by mounting the valve operating mechanism inside the tank and/or protective skids applied to the bottom of the tank. Continuation of the valve assembly below the tank shell or skid must be designed so that it will fail without damaging the valve, causing a release of product. This is accomplished by incorporating a shear groove in the valve body or sizing

the bolts attaching the valve extension to have low-shear strength.

Top Fittings Protection – Pressure tank cars are required to have a protective housing bolted to the pressure plate. Top fittings on Class-117 tank cars and nonpressure tank cars in sulfuric acid service must also be protected. Depending upon the date when ordered for construction, nonpressure tank cars transporting a Packing Group I or II material must have top fittings protection. (See Section 4: Nonpressure Tank Cars for additional information.)

Pressure Relief Devices

PRDs are fittings designed to relieve the internal pressure within a tank car above a specified value that may result from abnormal conditions or from normal pressure increases during transportation (pressure relief device is synonymous with safety relief device). Conditions that may cause a PRD to function include the exposure of the tank car to fire, hydrostatic pressure created within a tank overloaded by volume, chemical (exothermic) reaction of the lading in the tank that builds up pressure (such as polymerization), and/or an over-speed impact that results in a pressure spike due to the surge action of the liquid.

A type of a PRD (a regulating valve) may be used on certain tank cars, such as those transporting carbon dioxide and cryogenic liquids, to intentionally vent vapor during transportation. Such venting is normal in transportation.

In addition to devices that relieve internal pressure, nonpressure tank cars may be equipped with a device to prevent a vacuum from forming within the tank.

In general, there are two categories of PRDs: (1) reclosing devices, such as pressure relief valves (PRVs), and (2) nonreclosing devices (rupture disc devices) commonly called safety vents. **Note:** When used in the Field Guide, the term "safety vent" is interchangeable

with "rupture disc device" or "nonreclosing pressure relief device".

On nonpressure and pressure tank cars, the PRDs are located on the top of the tank; on cryogenic liquid tank cars, the PRDs are located in closed compartments or cabinets containing the loading and unloading equipment, typically mounted on the sides or on one end of the car.

Pressure relief valves (PRVs) are spring-loaded, reclosing PRDs designed to open at a set pressure to relieve excessive pressure within the tank. They then automatically reclose after normal conditions are restored. A tank car may be equipped with multiple PRVs to provide the necessary flow capacity for the commodity.

Safety vents are nonreclosing pressure relief devices equipped with a rupture disc designed to burst at a certain pressure to relieve pressure. If the disc bursts, the device remains open until the disc is replaced.

Rupture discs are made from plastic/composite materials or a metal body (usually stainless steel) incorporating an elastomeric-type membrane. Rupture disc devices, instead of PRVs, are typically used on tank cars transporting corrosive materials (such as sulfuric acid) and other materials that may have properties that would be detrimental to the components of a PRV.

Safety vents are also used on tank cars transporting nonregulated commodities, such as corn syrup and clay slurry, and in combination with other PRDs on tank cars transporting cryogenic liquids, such as ethylene, argon and oxygen.

Nonpressure tank cars in regulated commodity service that are equipped with a rupture disc device must have a surge pressure reduction device that, by design, reduces the internal surge pressures at the pressure relief device interface. Such devices are not required for molten sulfur, acrylamide and elevated temperature materials.

Combination PRDs incorporate a nonreclosing device, such as a breaking pin or rupture disc, in series with a spring-loaded reclosing pressure relief valve. The PRV must be outboard of the nonreclosing device (breaking pin or rupture disc). The breaking pin or rupture disc must be designed to fail at a pressure higher than that of the spring-loaded portion of the device. Thus, if internal pressure causes the pin or disc to fail, the spring-loaded portion will open.

Combination PRDs are typically used on high-hazard PIH/TIH materials, such as chlorine. Combination PRDs utilizing a rupture disc are required to be equipped with a device to detect any accumulation of pressure between the disc and the spring-loaded valve. The device must be a needle valve, try cock, or telltale indicator, which must remain closed during transportation.

Regulating (regulator) valves (called a pressure control device for cryogenic liquid tank cars) are required on pressure tank cars transporting carbon dioxide and nitrous oxide, and cryogenic liquid tank cars transporting liquefied argon, nitrogen, or oxygen. These spring-loaded PRDs, with start-to-discharge pressures lower than the other PRDs (a pressure relief valve and a safety vent), are intended to vent vapor during transportation to maintain internal pressure (through auto-refrigeration) below that of other PRDs.

Tank cars equipped with these devices must be stenciled "REGULATING VALVE(S) VENTING NORMAL" on both sides.

Vacuum-relief valves (also called vacuum breakers) are applied to some nonpressure tank cars to admit air into the tank to prevent excessive internal vacuum that may result in a collapse (implosion) of the tank. This danger exists during closed-system unloading operations using pumps, where the tank is not vented to allow air to enter or, in extreme cases, where an empty tank is subjected to wide temperature variations (hot to cold); e.g., steaming or steam-cleaning a tank car.

Vacuum-relief valves are typically set at negative 0.75 psig or lower. A vacuum-relief valve should not be depressed to determine if there is pressure in the tank, because doing so may dislodge the O-ring seal causing the device to leak.

Breather vents (also called continuous vents) are devices equipped with a permeable disc, such as pumice stone or a plastic-type membrane. Breather vents are typically applied to nonpressure tank cars transporting hydrogen peroxide solutions to prevent pressure buildup within the tank by allowing the venting of oxygen, which is generated as the material naturally decomposes.

Totally contained commodities are commodities like corn syrup that have been authorized by the AAR Tank Car Committee to be shipped in tank cars not equipped with PRDs. Such tank cars must be stenciled with an AAR specification (a DOT Special Permit is required for DOT specification tank cars.)

Further, tank cars must be marked with the name of the commodity it is carrying in minimum 4-inch high lettering and the words "NO PRESSURE RELIEF DEVICE" in minimum 2-inch high lettering beneath the name of the commodity.

Pressure Relief Device Settings

For nonpressure and pressure tank cars, governmental regulations prescribe that the start-to-discharge (STD) pressure of a reclosing PRD may not be lower than 75 psig or exceed 33 percent of the tank's minimum burst pressure. For example, a tank car with a 300 psig tank test pressure (750 psig minimum burst pressure), must have the pressure relief valve's STD set between a minimum of 75 psig and a maximum of 247.5 psig (33% of 750 psig).

A reclosing valve must have a vapor-tight pressure (VTP) of at least 80 percent of the STD pressure. For example, the minimum VTP for a 75 psig valve would be 60 psig, and the minimum VTP for a 247.5 psig valve would be 198 psig.

Tanks built prior to October 1, 1997, having a minimum burst pressure of 500 psig or less may be equipped with reclosing valve(s) having an STD pressure of no less than 14.5 percent of the minimum burst pressure, but no more than 33 percent of the minimum burst pressure. For example, on a tank with a 60 psig tank test pressure (240 psig) minimum burst pressure, the pressure relief valve must be set between 38.8 (35) and 79.2 (80) psig.

For a nonreclosing safety vent, the rupture disc must be designed to burst at a pressure equal to the greater of either 100 percent of the tank's test pressure or 33 percent of the tank's burst pressure. For example, on a tank car with a 100 psig tank test pressure (500 psig minimum burst pressure), the disc must burst at the greater of 100 psig or 165 psig (33% of 500 psig); therefore, the disc must be designed to burst at 165 psig.

For a combination PRD, the breaking pin must be designed to fail or the rupture disc burst at the pressure prescribed for a reclosing PRD/PRV. Further, the reclosing PRV must be set to discharge at a pressure not greater than 95 percent of the STD pressure. For example, on a tank car with a 500 psig tank test pressure (1250 psig minimum burst pressure), the breaking pin must fail or the rupture disc must burst between 75 and 412.5 psig, and, depending upon the pin or disc's fail point, the reclosing valve must be set to discharge between 71.25 and 391.9 psig.

The type of PRD and the start-to-discharge (STD) pressure of a reclosing pressure relief device or the burst pressure of a rupture disc or breaking pin (in psi) must be applied to the tank's qualification stencil (see page 25). When a rupture disc or breaking pin is used in a combination PRD, the pressure shown is that of the rupture disc or breaking pin.

Tank cars transporting carbon dioxide and nitrous oxide are equipped with three types of PRDs: (1) a reclosing PRV having a STD pressure not exceeding 75 percent of the tank test pressure, (2) a nonreclosing safety vent designed to burst at a pressure less than the tank test pressure, and (3) two regulating valves set to

open at a pressure not to exceed 350 psig on a 500 psig test pressure tank or 400 psig on a 600 psig test pressure tank. In addition, the final discharge of each PRD must be piped outside of the protective housing. **Under no circumstances should these discharge pipes be plugged or otherwise blocked.**

Note: Carbon dioxide tank cars are loaded between 200 and 215 psi pressure, with commodity temperature of minus 16 to minus 20 degrees F. These tank cars have 5 inches of urethane foam insulation, which provides approximately 8 to 10 days' transport time before the commodity warms up. If pressure builds in a 500 psig test pressure tank, the first regulator valve vents at 340 psi. The second regulating valve will vent at 350 psi. If pressure continues to increase, the safety relief valve will open at 375 psi. If the commodity temperature continues to increase, the rupture disk will open at 486 psi. If a rupture disc fails, the liquid will start turning to dry ice when the pressure falls below about 60 psig. Regulating valves create a light hissing sound typically noticeable within one to two car lengths. A venting PRV will be noticeable approximately 5 to 10 car lengths. An open vent can be heard from greater distances.

Cryogenic liquid tank cars transporting atmospheric gases are equipped with one or more pressure relief valves, safety vents/rupture disc device, and regulating valves. The regulating valve is normally set to limit internal pressure to no more than 25.3 psig under ambient temperature conditions. Some tank cars may have a second safety vent/rupture disc device in series with the first. They are connected to the tank by means of a crossover valve so that only one safety vent/rupture disc device is on line at a time.

SECTION 3: TANK CAR STENCILING AND MARKINGS

There is a considerable amount of information required by DOT, TC, and/or AAR to be stenciled or marked on the exterior of a tank car. There are standards as to the location and size of the required stenciling.

The information most useful is the tank car's reporting mark (also called initials) and the car number. The reporting mark, usually three to four letters, identifies the car's owner (marks ending with an X denote that the car is not owned by a railroad) and is followed by up to six digits; e.g., AARX 122016. The reporting mark and number are the tank car's unique identifier and are required to be marked on each side of the car to the far left of center and in the center of each end.

Many tank cars are also marked with the reporting mark and number on the top of the car and/or diagonally positioned on the ends.

In an emergency, you may identify the contents of a car, from a safe distance, by looking up its reporting mark and number on the train consist/train list/wheel report or other shipping document.

Stenciled below the reporting mark and number will be the tank car's load limit (LD LMT) and light weight (LT WT). The load limit is the maximum weight of lading that may be loaded into the tank car. The light weight is the weight of the tank car when empty. The tank's volumetric capacity, in gallons and liters, is stenciled centered on each end. (The capacity may also be shown in imperial gallons.)

The tank car's specification is required to be marked on both sides to the far right of center. The following information can be used to identify the type and characteristics of the tank car.

DOT and TC Tank Car Classes:

- Nonpressure Tank Cars: 111, 115, and 117
- Pressure Tank Cars: 105, 109, 112, 114, and 120
- Cryogenic Liquid Tanks Cars: 113

AAR Tank Car Classes:

- Nonpressure Tank Cars: 206 and 211
- Cryogenic Liquid Tank Cars: 204

Nonpressure and pressure tank cars manufactured prior to July 25, 2012, were required to have the specification; material; cladding material (if any); tank builder's initials; date of original test; and car assembler (if other than the tank builder) permanently stamped into the metal near the center of both outside heads.

Currently, Class-113 cryogenic liquid tank cars are required to have similar information, including additional information, such as, design service temperature, water capacity, in pounds, and tank shell and head thickness stamped into, or displayed on a metal plate applied to, the B-end (the end of the tank car with the hand brake) outer jacket/shell.

Tank cars manufactured after July 25, 2012, are required to display two identical permanent identification (ID) plates made of corrosion-resistant metal mounted diagonally on the inboard surfaces of the right side (AR) and left side (BL) body bolster webs. The following information is required to be shown on the ID plates: the car builder's name and serial number; the AAR Certificate of Construction (CofC) number; tank shell/head material; insulation/thermal protection materials and thickness; underframe/stub-sill type; and, date built. For examples of ID plate formatting, see page 23.

Identification Plate

Car builder's name:	**Allied Tank Car Co**
Builder's serial number:	**2016 – 01110**
Certificate of construction/exemption:	**AO10209-1234**
Tank specification:	**DOT-117A100W**
Tank shell material/head material:	**TC128 GR B NORM**
Insulation materials:	**Ceramic Fiber/Fiberglass**
Insulation thickness:	**0.5 inch/3.0 inch**
Underframe/Stub sill type:	**RPM-101**
Date built:	**Dec 2016**

Note: Tank cars built before July 25, 2012 may have the identification plates instead of, or in addition to, the head stamping.

When a modification (e.g., retrofitting a Class-111 tank car to a Class-117) changes any of the information on the ID plate, an additional variable ID plate must be installed that includes the "AAR Number" (AAR CERT NO) assigned to the modification, items that were modified, and the month and year of the modification.

Variable ID Plate

AAR Cert No:	**AO11222-2345**
Insulation Material:	**1/2 inch Ceramic Fiber**
Date of Mfg:	**10/2016**

Other information is required to be stenciled on both sides of the tank car near the specification marking on a "qualification stencil"; e.g., required periodic inspections and testing of the tank, PRDs, interior heater system, and interior lining/coating. The stencil will also include the due dates for next inspections and tests.

At the time of construction, tank car tanks are subject to an initial hydrostatic pressure test corresponding to its specification; e.g., the tank test pressure for a specification DOT-111A100W2 tank car is 100 psig. (Some tank car builders test nonpressure cars to 33 percent of the minimum burst pressure; i.e., 165 psig for a tank with a 500 psig minimum burst pressure.)

Prior to 1998, governmental regulations prescribed periodic internal visual inspections, hydrostatic testing of the tank and internal heater coils (if so equipped), and testing of the PRV. Beginning in 1998 (for tank cars without metal jackets) and 2000 (for tank cars with a metal jacket or thermal protection system), all single-unit tank cars (other than Class-113 cryogenic liquid tank cars) used to transport hazardous materials/dangerous goods became subject to periodic "continuing qualification" inspection and testing requirements in lieu of periodic hydrostatic retesting.

The frequency of continuing qualification inspections is based on whether or not the tank car transports commodities that are corrosive to the tank, and whether or not the tank has an interior lining or coating. By regulation, qualification intervals for the tank may not exceed 10 years; for the service equipment, qualification intervals are 5 or 10 years, unless a greater period is approved by the Federal Railroad Administration.

The current periodic qualification inspections include the following:

- Internal and external visual examinations of the tank
- Structural integrity inspections of various tank welds
- Tank thickness tests
- Safety system inspections, including thermal, head and skid protection, reclosing PRD, and service equipment (valves and fittings)
- Marking inspections
- Lining and coating inspections
- Leakage pressure tests

In addition, the AAR requires periodic inspections of the tank car's trucks and coupler/draft gear components (88.B.2 Inspection) and stub sills (Stub Sill Inspection).

The qualification/test dates and the due date for the next inspections (year only, in four digits) are recorded on a standardized qualification stencil (measuring 44 11/16 inches by 18 3/4 inches) applied to both sides of the tank.

Tank Car Qualification Stencil

	STATION STENCIL	QUALIFIED	DUE
TANK QUALIFICATION	TMMX	2015	2025
THICKNESS TEST	TMMX	2015	2025
SERVICE EQUIPMENT	TMMX	2015	2025
PRD: VALVE 75 PSI	TMMX	2015	2025
LINING:	TMMX	2015	2025
88.B.2 INSPECTION	TMMX	2015	2025
STUB SILL INSPECTION	TMMX	2015	2025

Note: The following is an explanation of some of the information found in the qualification stencil.

Station stencil: an alpha code assigned by the AAR to the tank car facility performing the inspection.

Service equipment: filling/discharge, venting, safety (other than pressure relief devices), heating, and measuring devices.

PRD: indicates the type of pressure relief device applied and its start-to-discharge (STD) or burst pressure.

- **VALVE:** reclosing pressure relief valve.
- **DISC or VENT:** nonreclosing rupture disc device.
- **COMB**: combination pressure relief device (reclosing valve with a rupture disc or breaking pin).
- **NONE:** no pressure relief device (total containment).

INT HTRS: interior heater system. Exterior heater systems do not require requalification.

Lining PP: indicates the lining is applied to maintain product purity, not to protect the tank from the corrosive effects of the lading. PP linings do not require requalification.

The date the tank car was built (BLT) and type of air brake valves are shown on a consolidated stencil applied to each side of the tank.

In addition to placards and identification number markings, governmental regulations require that the proper shipping name or authorized common name of certain hazardous materials/dangerous goods must be marked on each side of the tank car in letters at least 3.9 inches high. For shipments originating in the United States, these commodities are listed in §§172.325(b) and

172.330(a)(1)(ii) of Title 49, Code of Federal Regulations (CFR).

Other markings that may be required on tank cars include:

- Marine Pollutant mark for Marine Pollutants.
- HOT for Elevated Temperature Materials.
- INHALATION HAZARD for commodities that are poisonous/toxic by inhalation.
- NON-ODORIZED or NOT ODORIZED for shipments of unodorized Liquefied Petroleum Gases (LPGs). These markings may appear on a tank car used for both unodorized and odorized LPG.
- REGULATING VALVE(S) VENTING NORMAL, REGULATING VALVE(S), RELIEF VALVE, or RUPTURE DISC, as appropriate, over/under the discharge pipe for tank cars in argon, oxygen, carbon dioxide, and nitrous oxide.
- DOT-SP***** for a tank car operating under the provisions of a DOT Special Permit.
- SR-**** for a tank car that is operating under the provisions of a Canadian Safety Permit-Rail.
- AAR ST-*** for a tank car that is operating under an AAR Service Trial.
- EXS after the reporting mark and number for a tank car authorized for extended service status. Example: BOEX 2016 EXS
- FRA AIP near the qualification stencil indicates that a Federal Railroad Administration (FRA) approved alternative inspection program authorizes an extended qualification interval.
- Tank cars equipped with bolted and hinged manway covers must be marked with a manway style decal or stencil near the manway. The letters and numerals must be at least 1/4-inch high. Manway style charts are found in Appendix D of the AAR Specifications for Tank

Cars and AAR Pamphlet 34 and identify manway styles, manway nominal diameter, number of bolts, and gasket dimensions.

Some tank cars are equipped with remote monitoring equipment (RME) to monitor and record or transmit certain data regarding a shipment, such as location (via GPS), lading temperature and/or pressure, leak detection, impact detection, indication of tampering with or opening the protective housing, and loaded or empty status.

The AAR has established standards regarding the placement of such devices and wiring. Tank cars equipped with RME must display labels or stencils within 12 inches of the sensor, be bright yellow or orange with black lettering, and be at least 2 x 3 inches. The marking must describe the device and provide a telephone number to call for information on the device.

Typical Remote Monitoring Devices

Location of Key Stenciling

Right Side:

- DOT SP / SR / AAR ST
- COMMODITY NAME
- DOT / TC / AAR SPECIFICATION
- QUALIFICATION PANEL

Left Side:

- REPORTING MARK / NUMBER
- LD LMT (LB / KG)
- LT WT (LB / KG)

Heads:

- REPORTING MARK / NUMBER
- CAPY (GAL)
- CAPY (L)

Consolidated Stencil

Type of air brake valves → DB – 10 DB – 20

Car built date → BLT 10-16

Photos courtesy of Norfolk Southern Railway Company.

SECTION 4: NONPRESSURE TANK CARS

Nonpressure tank cars (also called "general service" or "low-pressure" tank cars in the *2016 Emergency Response Guidebook*), Classes DOT/TC-111, 115 and 117 and AAR-206 and 211, are used to transport a wide variety of liquid and solid regulated (hazardous materials/ dangerous goods) as well as nonregulated commodities. The most common nonpressure tank cars in use today are Class-111 and Class AAR-211.

Class-111 tank cars made of carbon or alloy (stainless) steel are required to have a minimum shell thickness of 7/16 inch, and those made of aluminum are required to have a minimum shell thickness of 1/2 inch (60 psig tank test pressure) or 5/8 inch (100 psig tank test pressure). Regardless of the material of construction, Class-111 tank car tanks with a 60 psig tank test pressure are required to have a minimum burst pressure of 240 psig, and those with a 100 psig tank test pressure are required to have minimum burst pressure of 500 psig.

Class-117 tank cars are designed primarily for the transportation of Class 3 (flammable liquid) materials. Specification DOT/TC-117A100W tanks are required to be constructed of AAR TC-128 Grade B, normalized carbon steel, with a minimum thickness of 9/16 inch. The tank test pressure is 100 psig, with a bursting pressure of 500 psig. Class-117 tank cars must have a tank head puncture resistance system consisting of full-height head shields at least 1/2-inch thick and a thermal protection system covered by a metal jacket of not less than 11 gauge (approximately 1/8 inch) thick (tank insulation is optional). A reclosing pressure relief device and top fittings must be protected. If equipped with a bottom outlet, the operating handle must be removed before movement, or the valve must be designed with a

protection safety system to prevent unintended actuation during train accident scenarios.

Note: Additional information regarding Class-117 tank cars may be found in the Annex.

Class-211 tank cars are similar to Class-111 tank cars, and, with certain exceptions, must be built in accordance with the applicable DOT/TC specification; e.g., a specification AAR-211A100W1 tank car must be built to the requirements for a specification DOT-111A100W1 tank car. The main differences between an AAR tank car and its DOT/TC specification counterparts are:

- Class-211 tank car tanks require only partial post-weld heat treatment at the time of construction. Class-111 carbon and alloy (stainless) steel tanks and welded attachments must be post-weld heat treated as a unit. Tank car tanks made of aluminum are not allowed to be post-weld heat treated.
- Class-211 tank car tanks constructed of carbon and alloy (stainless) steel do not require radioscopic examination of welded joints; however, welded joints of aluminum tanks must be examined.
- Additional/special fittings on AAR cars to meet user needs.

Most nonpressure cars have a low-profile manway nozzle on top of the tank, equipped with a gasketed hinged and bolted manway cover. The cover is opened for loading/unloading or for access into the tank for maintenance. Other styles of manway covers (such as those on sulfuric or hydrochloric acid tank cars) are semi-permanently attached to the manway nozzle and are equipped with a small gasketed hinged and bolted fill hole with a cover that is opened for loading or unloading.

Loading and unloading fittings are typically located in the general area of the manway and are often enclosed within a hinged combination housing called a protective housing by DOT regulations, but commonly called a breadbox or mailbox. Some nonpressure tank cars may be equipped with a protective housing similar to those used on pressure tank cars to provide additional protection for the valves and fittings.

All Class-117 tank cars, and some other nonpressure tank cars, are equipped with a protective housing similar to those used on pressure tank cars to provide additional protection for the valves and fittings.

On nonpressure tank cars, the top-mounted loading/unloading equipment will usually include a 2- or 3-inch liquid eduction line (located along the centerline of the tank). The liquid eduction line consists of a liquid valve (or other closure) and eduction (or siphon) pipe that extends to the bottom of the tank. The eduction pipe may extend into a sump.

A sump is a formed depression (or bowl) in the bottom of the tank where the lading will drain, allowing more complete emptying of the tank.

There may also be a smaller eduction line (typically 1 inch), called an air line, air inlet or vapor valve, used to introduce a compressed gas (e.g., air and nitrogen) to pressurize the tank for unloading through the liquid eduction line. This device may also be used to vent the tank during loading or unloading.

Other fittings may include a vacuum-relief valve, a 1/4-inch sample line, and/or a gauging device (either a magnetic ball style or a fixed-length telltale pipe with a control [needle] valve). The interior of the tank may be equipped with an outage gauge (at the manway nozzle) indicating vacant or vapor space in the tank, usually graduated in inches of outage.

On nonpressure tank cars in some services (e.g., sulfuric acid), the liquid eduction line and air line fittings

may not have control valves because they are closed with pipe caps, plugs, or blind flanges.

PRDs (reclosing pressure relief valves or nonreclosing rupture disc devices/safety vents) may be attached to the top of the tank on separate nozzles or attached to the manway cover.

Nonpressure tank cars in some corrosive services will often have the manway plate face and fittings flange faces rubber lined. However, due to advances in coating and lining materials, some nonpressure tank cars in corrosive service may have metal-based, hard coated, or hard polymer-lined manway plate or fittings flange faces and components of material suitable for the service.

In addition to insulation, some nonpressure tank cars in flammable liquid service have been equipped with thermal protection and Class-117 tank cars are required to have a jacketed thermal protection system (insulation is optional).

Except for certain specifications, nonpressure tank cars may be equipped with bottom outlet valves for loading or unloading. These valves may be ball, wafer-sphere, or butterfly style valves that are operated from beneath the car. They may also be plug or clapper style valves that are operated from the top of the tank.

The top-operated bottom outlet valve is an internal plug valve that is mounted on the bottom of the tank. The valve is attached to a rod that passes up through the tank and through a stuffing box body on top of the tank. The stuffing box body is equipped with a combination cover and wrench (T-wrench or cone) used to open and close the valve.

Certain specification nonpressure tank cars may be equipped with a bottom washout that can be removed to facilitate cleaning of the tank's interior. It is not used in loading/unloading operations.

Depending upon their projection from the bottom of the tank shell, bottom outlet, blind flanges, washouts, and sumps (referred to as bottom discontinuities) applied to stub sill tank cars may be required to have bottom fittings protection.

Typically, this protection is provided by attaching skids to the bottom of the tank to protect the fittings in the event of a derailment. Some nonpressure tank cars are also equipped with skids to protect their top fittings.

Nonpressure tank cars may have insulation (typically fiberglass, mineral wool blankets, or foam) applied over the tank and enclosed within a metal jacket. For Classes 115 and 206, the insulation is applied between the inner and outer tanks. Per regulation, the jacket must be not less than 11 gauge (approximately 1/8 inch) thick. Insulation is used to moderate the temperature of the lading during transportation; e.g., to keep the lading cool or warm, depending upon its characteristics and the season of the year or as an aid in heating the product for unloading.

Nonpressure tank cars may also be equipped with interior or exterior heater coils. Prior to unloading, steam, hot water, or hot oil lines are attached to the coil inlets and outlets. As the heating medium circulates through the coils, it heats the liquid or melts solidified ladings, such as phosphorus, sulfur, wax, and asphalts, to facilitate unloading. Interior heater coil inlet and outlet pipes are required to have caps or plugs applied during transportation. Exterior heater coils do not require caps, and the car must be stenciled "EXTERIOR HEATER PIPES – NO INLET OR OUTLET PIPE CAPS REQUIRED". Some nonpressure tank cars are equipped with electric-resistance heater systems in place of heater coils.

Nonpressure single-unit tank cars may be divided into compartments by inserting ellipsoidal heads into the tank shell (heads must be concave to the lading of each compartment) or by joining separately constructed tanks to make a single car structure. Each compartment will have its own loading/unloading fittings and PRD.

Compartments must be identified numerically, beginning with the B-end (the end of the car with the hand brake wheel) compartment as number 1 and numbered consecutively toward the A-end (the end without the brake wheel).

Note: Unlike highway cargo tanks, tank car compartments are not constructed by applying interior walls within a single tank. Further, unlike some cargo tanks, tank cars do not have interior baffles to control lading surges.

Class-115 and Class-206 nonpressure tank cars have an inner container (tank) constructed of carbon steel, alloy (stainless) steel, manganese molybdenum steel, or aluminum. The inner tank is supported within an outer shell (tank, not jacket).

The annular space between the inner tank and outer tank contains insulation. These cars are commonly referred to as tanks-within-a-tank as the outer shell (tank) is constructed in the same manner as a tank car tank; it is not merely a metal jacket covering an insulated tank.

For Class-115 tank cars, the outer tank may be fabricated of the same materials authorized for inner tanks and must be at least 7/16-inch thick. For Class-206 tank cars, the outer tank must be fabricated from carbon steel. They may be divided into compartments, have a 60-psig tank test pressure, and, in addition to loading/unloading and pressure relief devices, they may be equipped with a bottom outlet and/or bottom washout. These tank cars are normally used to transport temperature-sensitive commodities that require a highly efficient insulation system.

Note: The following illustrations (pages 35-68) show typical valve and fittings arrangements for nonpressure tank cars. Individual tank car arrangements may vary based upon product service and/or the equipment manufacturer. Nomenclature used in the illustrations may not always be consistent with that used in the text of the Field Guide.

DOT/TC-111A100W1 Tank Car for Alcohol and Methanol Service

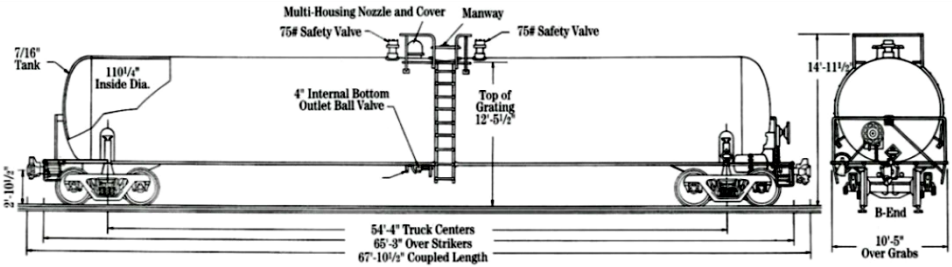

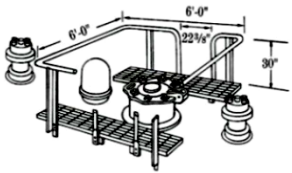

CAPACITY & WEIGHTS

Net Capacity @ 2% Outage – 29,348 gals.

Estimated Light Weight – 67,000 lbs.

Rail Load Limit (100 Ton Trucks) – 263,000 lbs.

COMMODITY MAXIMUM DENSITY

Truck Cpty.	Wheel Base	Non-Coiled Comm. wt./gal.
100 Ton	5'-10"	6.68#

DOT-111A100W1
For Alcohol & Methanol Service
29,947 GALLON CAPACITY – NON-INSULATED (v. 1)

© Copyright, General American Transportation Corporation; reprinted with permission.

Top Operating Platform for Nonpressure Tank Cars (Post 1982)

Part No.	Description
62	Step Tread
112	Handrail
114	Ladder Stile
211	Corner Post
213	Support Bracket
215	Platform Grating
255	Safety Valve Assembly
339	Manway Cover
350	Manway Ring
464	Anti-Skid Coating

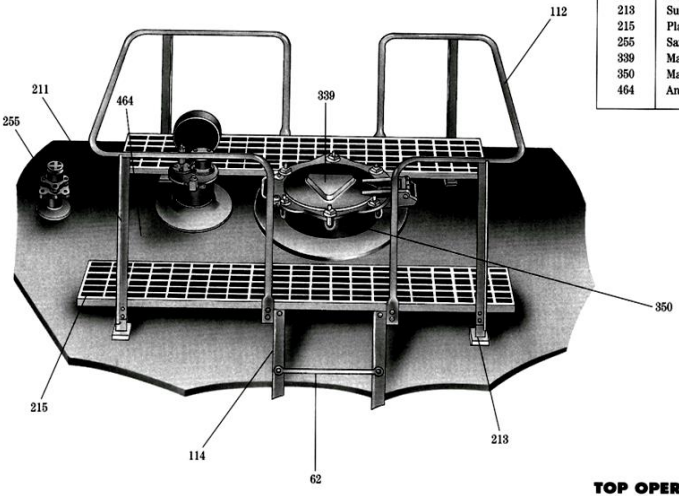

TOP OPERATING PLATFORM FOR GENERAL SERVICE CARS (POST 1982)
(6' x 6' Shown – Other Lengths/Widths Available)

© Copyright, General American Transportation Corporation; reprinted with permission.

DOT/TC-111A100W2 Tank Car for Sulfuric Acid Service

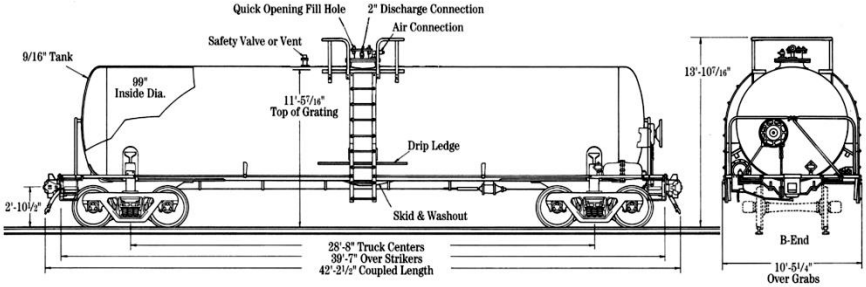

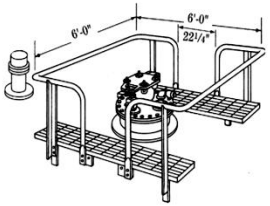

CAPACITY & WEIGHTS

Nominal Capacity @ 2% Outage – 13,600 gals.

Estimated Light weight (Non-Coiled) – 55,200 lbs.

Rail Load Limit (100 Ton Trucks) – 263,000 lbs.

COMMODITY MAXIMUM DENSITY

Truck Cpty.	Wheel Base	Non-Coiled Comm. wt./gal.
100 Ton	5'-10"	15.2#

DOT-111A100W2
For Sulfuric Acid Service
13,946 GALLON CAPACITY – NON-INSULATED (v. 2)

© Copyright, General American Transportation Corporation; reprinted with permission.

Loading and Unloading Arrangement and Top Operating Platform for Sulfuric Acid Cars

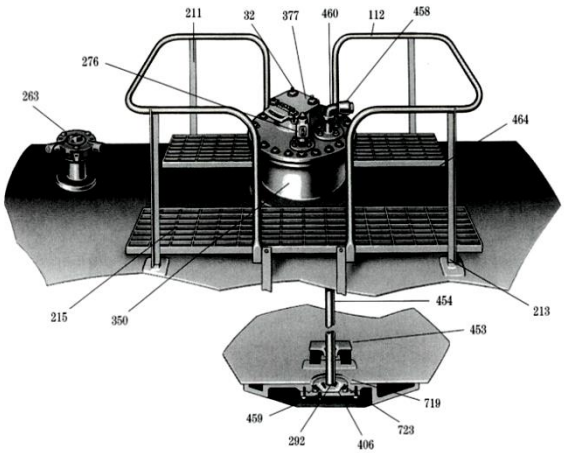

Part No.	Description
32	Eye Bolt
112	Hand Rail
211	Corner Post
213	Support Bracket
215	Platform Grating
263	Safety Vent Assembly
276	1" Air Connection Valve
292	Washout Plug
350	Flued Manway Nozzle
377	8" Fill Hole Cover
406	Washout Nozzle Flg.
453	Pipe Guide
454	Eduction Pipe
458	Pipe Cap
459	Tell-Tale Plug & Chain
460	Street Elbow
464	Anti-Skid Coating
719	"O" Ring
723	Gasket

LOADING AND UNLOADING ARRANGEMENT AND TOP OPERATING PLATFORM FOR SULFURIC ACID CARS

© Copyright, General American Transportation Corporation; reprinted with permission.

DOT/TC-111A100W5 (Rubber Lined) Tank Car for Hydrochloric Acid Service

20,429 GALLON CAPACITY – NON–INSULATED (v. 2)
DOT-111A100W5 (Rubber Lined)
For Hydrochloric Acid Service

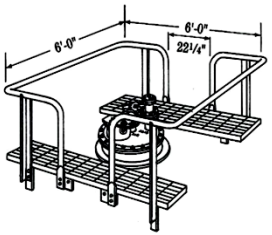

CAPACITY & WEIGHTS

Nominal Capacity @ 2% Outage – 20,000 gals.
Estimated Light Weight – 58,600 lbs.
Rail Load Limit (100 Ton Trucks) – 263,000 lbs.

COMMODITY MAXIMUM DENSITY

Truck Cpty.	Wheel Base	Non-Coiled Comm. wt./gal.
100 Ton	5'-10"	10.20#

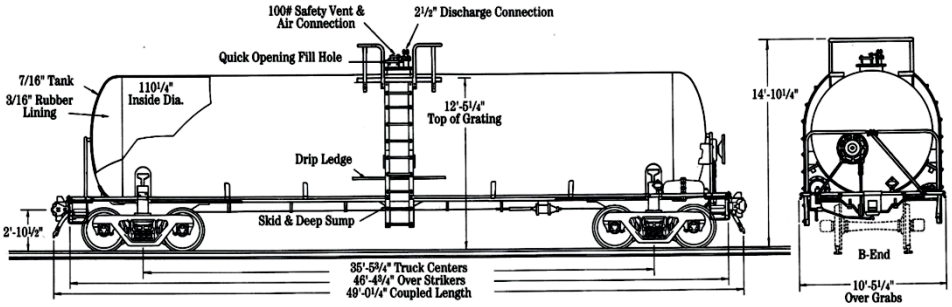

© Copyright, General American Transportation Corporation; reprinted with permission.

Loading and Unloading Arrangement for DOT/TC-111A100W5 (Rubber Lined) Tank Cars

PART NO.	DESCRIPTION
16	SEGMENTAL WASHERS
32	EYE BOLT ASSEMBLY
141	SUMP
161	SAFETY CHAIN
261	SAFETY VENT HOUSING
262	SAFETY VENT NOZZLE
339	MANWAY COVER PLATE
350	FLUED MANWAY NOZZLE
377	FILL HOLE COVER
379	UNLOADING PIPE ADAPTER
380	UNLOADING CONNECTION BLIND FLANGE
381	DISCHARGE PIPE
451A	AIR CONNECTION FLANGE
451B	DISCHARGE PIPE FLANGE
453	DISCHARGE PIPE GUIDE

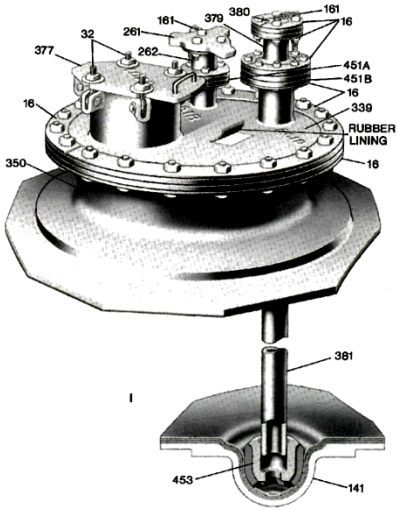

© Copyright, General American Transportation Corporation; reprinted with permission.

Top Operated, Bottom Unloading Valves

6-Inch Positive Internal Type Bottom Outlet Arrangement, Top Operated Internally Guided

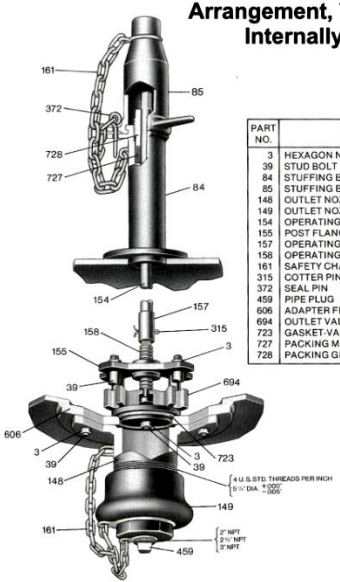

PART NO.	DESCRIPTION
3	HEXAGON NUT
39	STUD BOLT
84	STUFFING BOX BODY
85	STUFFING BOX COVER
148	OUTLET NOZZLE EXTENSION
149	OUTLET NOZZLE CAP
154	OPERATING ROD (POLISHED)
155	POST FLANGE
157	OPERATING ROD SOCKET
158	OPERATING SCREW
161	SAFETY CHAIN
315	COTTER PIN
372	SEAL PIN
459	PIPE PLUG
606	ADAPTER FLANGE
694	OUTLET VALVE (TOP GUIDED)
723	GASKET-VALVE SEAT (TEFLON)
727	PACKING MATERIAL (TEFLON CHEVRON)
728	PACKING GLAND (STAINLESS STEEL)

6-Inch Positive Internal Type, Jacketed, Bottom Outlet Arrangement, Top Operated Externally Guided

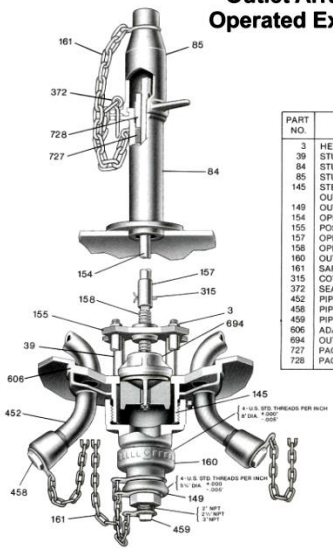

PART NO.	DESCRIPTION
3	HEXAGON NUT
39	STUD BOLT
84	STUFFING BOX BODY
85	STUFFING BOX COVER
145	STEAM JACKETED OUTLET NOZZLE
149	OUTLET NOZZLE CAP
154	OPERATING ROD
155	POST FLANGE
157	OPERATING ROD SOCKET
158	OPERATING SCREW
160	OUTLET NOZZLE REDUCER
161	SAFETY CHAIN
315	COTTER PIN
372	SEAL PIN
452	PIPE NIPPLE
458	PIPE CAP
459	PIPE PLUG
606	ADAPTER FLANGE
694	OUTLET VALVE
727	PACKING MATERIAL
728	PACKING GLAND

© Copyright, General American Transportation Corporation; reprinted with permission.

Bottom Outlet with Skid Protection

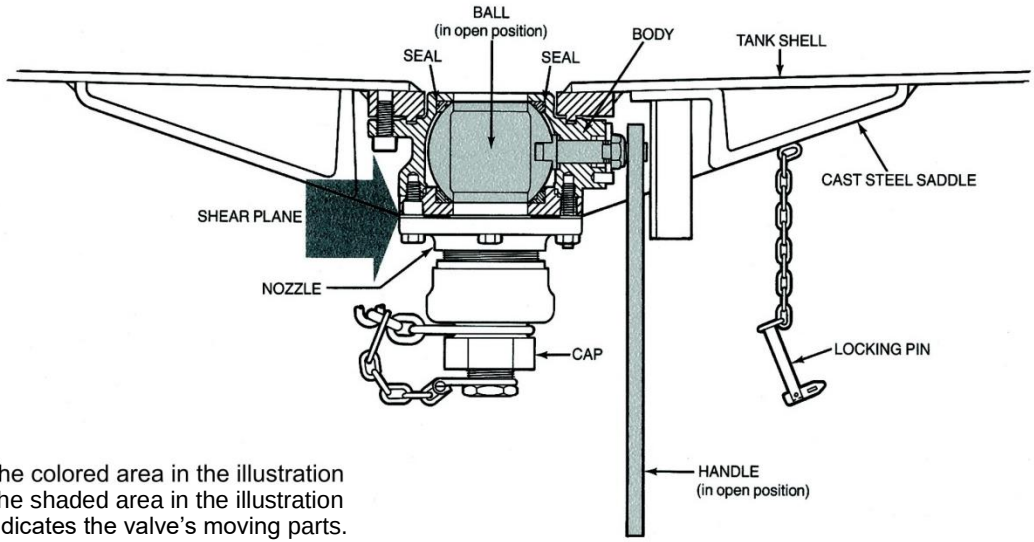

The colored area in the illustration
The shaded area in the illustration
indicates the valve's moving parts.

© Copyright, General American Transportation Corporation; reprinted with permission.

Internal Ball Valve

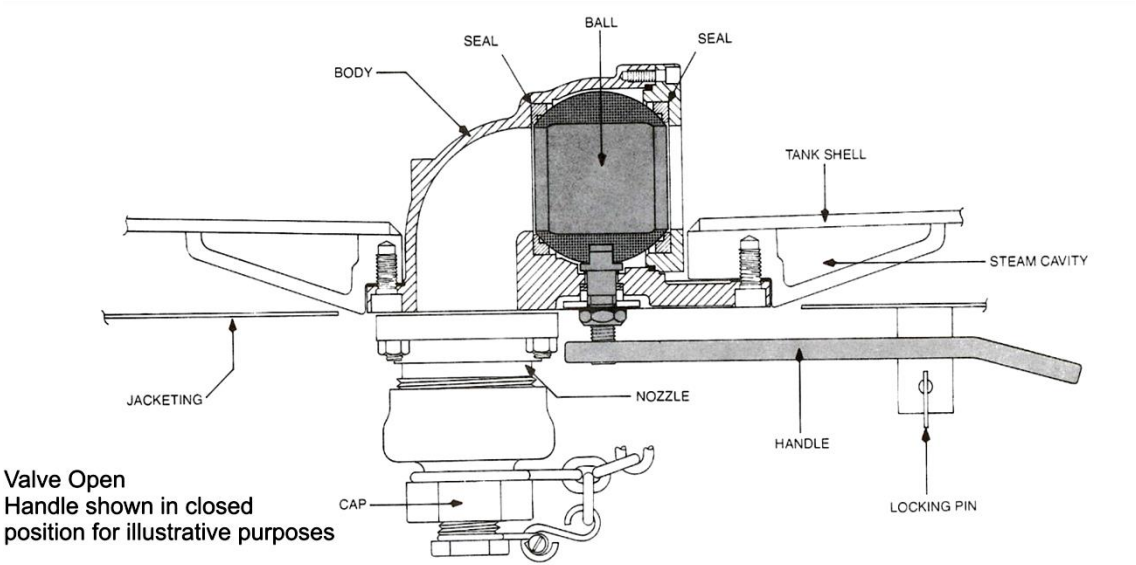

Valve Open
Handle shown in closed
position for illustrative purposes

© Copyright, General American Transportation Corporation; reprinted with permission.

Jamesbury and Posi-Seal Bottom External Butterfly-Type Valve

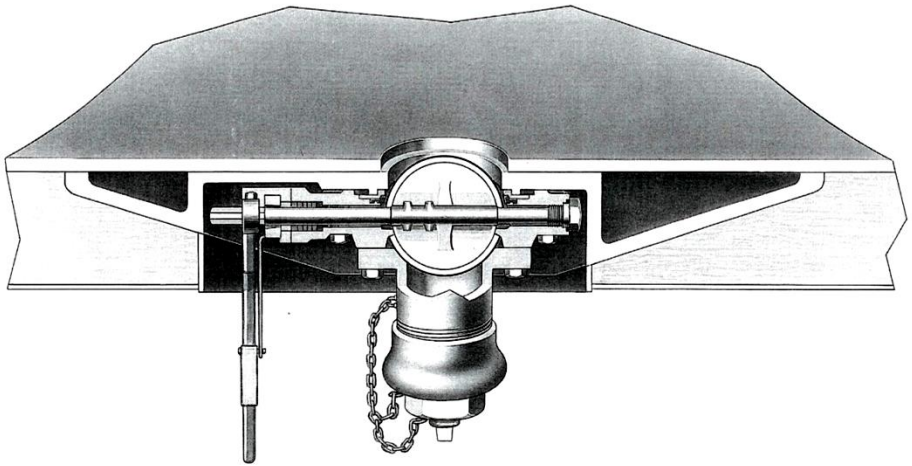

© Copyright, General American Transportation Corporation; reprinted with permission.

Typical Bottom Washout Arrangements

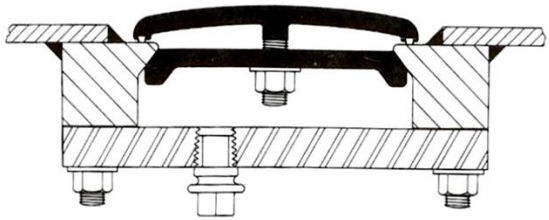

WASHOUT PLUG FOR UNCOATED, UNLINED CAR

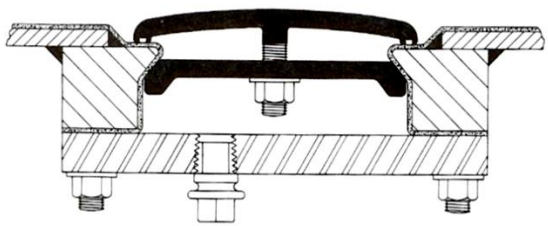

WASHOUT PLUG FOR CHEMICALLY COATED CAR

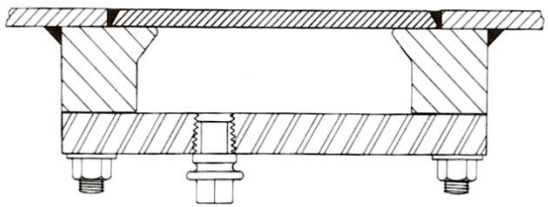

WELDED IN CLOSURE PLATE

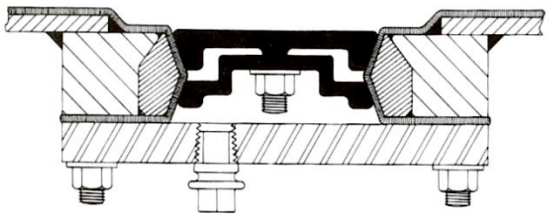

WASHOUT PLUG FOR RUBBER LINED CAR

© Copyright, General American Transportation Corporation; reprinted with permission.

Pressure Relief Valve

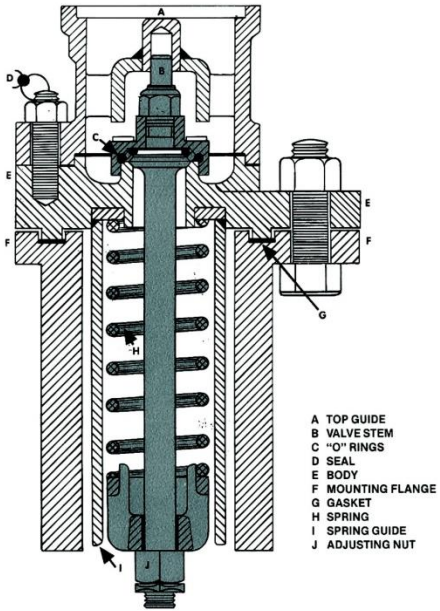

Internal Valve

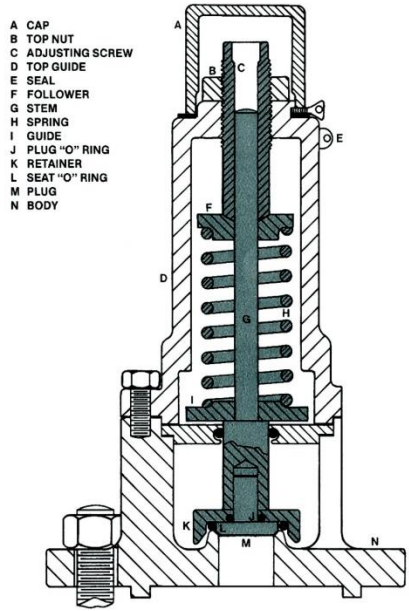

External Valve

© Copyright, General American Transportation Corporation; reprinted with permission.

Safety Vent

Note: Safety vents are also called a “rupture disc devices” and “nonreclosing pressure relief devices”.

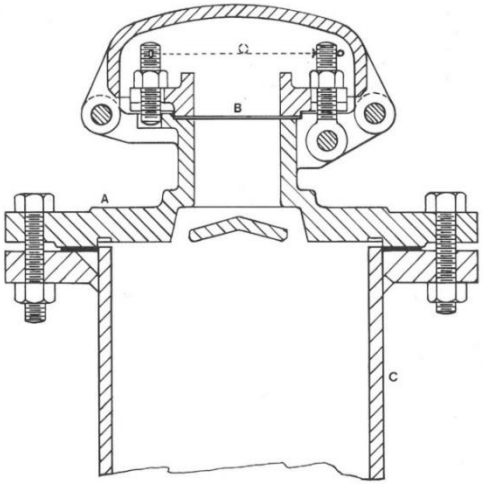

Detail of Side View

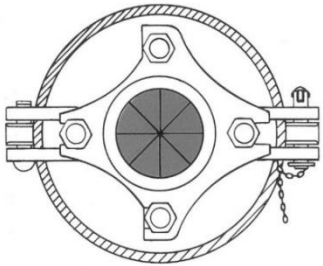

Cross Section
Showing Frangible Disc

A Safety Vent Housing
B Frangible Disc
C Nozzle

© Copyright, General American Transportation Corporation; reprinted with permission.

8 Line Interior Heater Coil, Simplex System, Connections at Bottom Outlet

Part No.	Description
6	Bar Support
145	Steam Jacketed Outlet Nozzle
205	Cradle Bar
454	Coil Pipe
456	Coil Return Bend
458	Pipe Cap

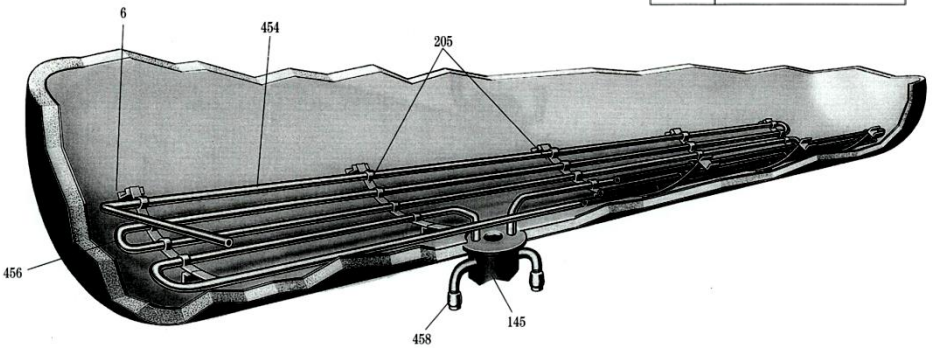

8 LINE INTERIOR HEATER COIL, SIMPLEX SYSTEM, CONNECTIONS AT BOTTOM OUTLET

© Copyright, General American Transportation Corporation; reprinted with permission.

10L 2T Serpentine Manifolded Half-Oval Outside Coil (Post 1974)

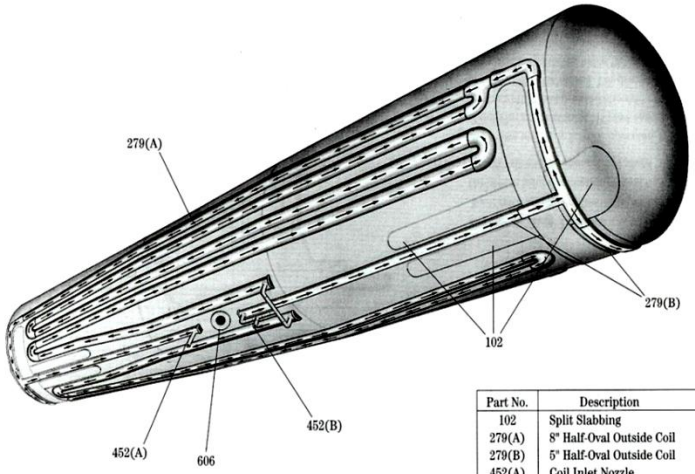

Part No.	Description
102	Split Slabbing
279(A)	8" Half-Oval Outside Coil
279(B)	5" Half-Oval Outside Coil
452(A)	Coil Inlet Nozzle
452(B)	Coil Outlet Nozzle
606	Outlet Flange Adaptor

10L 2T SERPENTINE MANIFOLDED HALF-OVAL OUTSIDE COIL (POST 1974)

© Copyright, General American Transportation Corporation; reprinted with permission.

Sulfuric Acid Tank Car with Top Fittings Protection

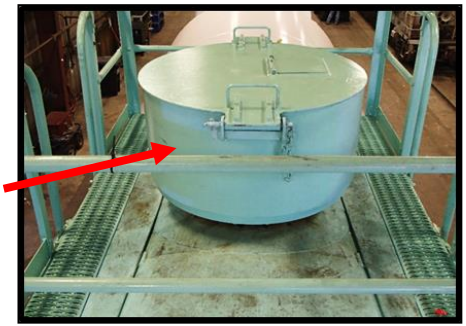

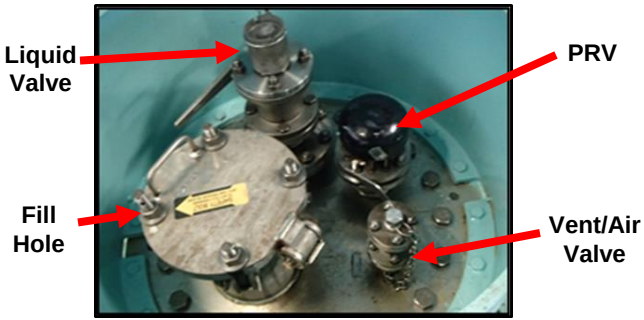

Courtesy of Veolia North America.

Sodium Hydroxide Tank Car with Top Fittings Protection

Bottom Outlet Valve with Operating Instructions

Courtesy of Norfolk Southern Railway Company.

Class DOT/TC-111A "CPC 1232" Tank Car for Flammable Liquid Service

(Equipped with Top Fittings Protection and Headshields)

Courtesy of Railway Association of Canada.

Headshield Detail

DOT Specification and Qualification Stencil

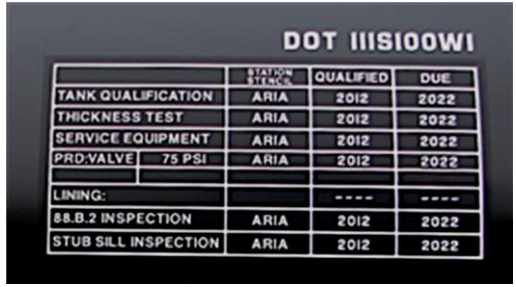

Courtesy of Canadian National Railway.

The letter “S” in the specification indicates the tank car is equipped with headshields.

Class DOT/TC-117 Tank Car Features

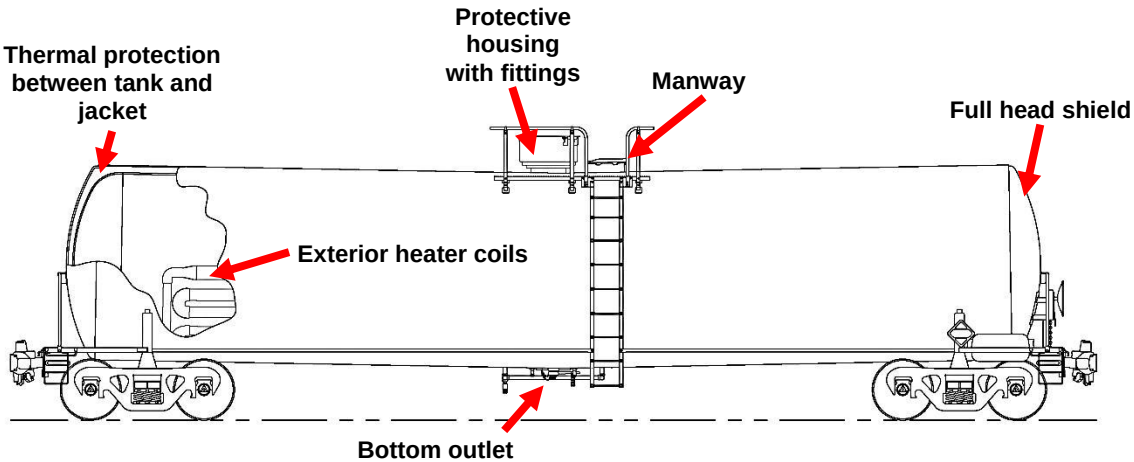

Courtesy of Trinity Industries, Inc.

DOT/TC-117J100W Tank Car for Flammable Liquid Service

Courtesy of Railway Association of Canada.

Class DOT/TC-117 Manway and Top Fittings Protective Housing

Class DOT/TC-117 Fittings Arrangement Inside Protective Housing

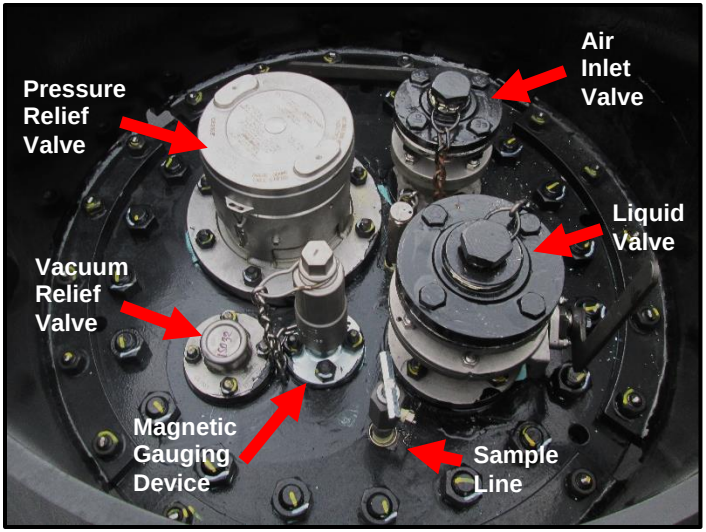

Courtesy of Railway Association of Canada.

Class DOT/TC-117 Bottom Outlet Operating Mechanism

(Operating Handle Disengaged During Transportation)

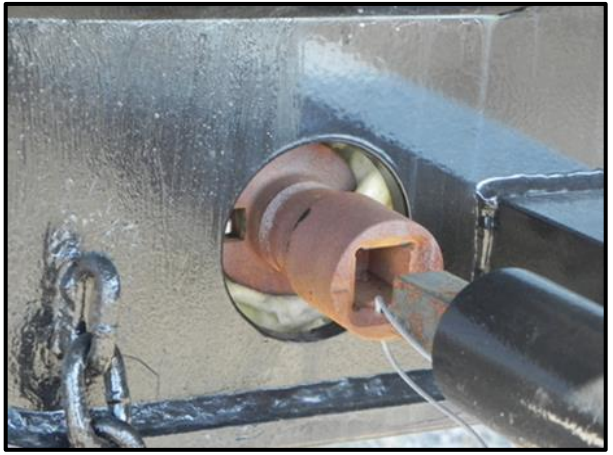

Courtesy of Railway Association of Canada.

DOT/TC-117R100W Tank Car for Flammable Liquid Service

DOT-117R100W Specification and Qualification Stencil

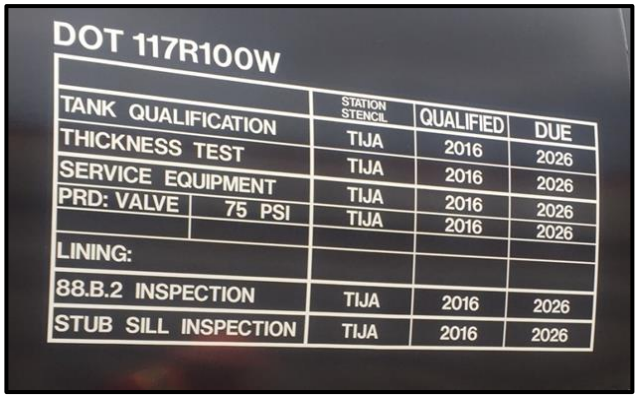

DOT 117R100W

		STATION STENCIL	QUALIFIED	DUE
TANK QUALIFICATION		TIJA	2016	2026
THICKNESS TEST		TIJA	2016	2026
SERVICE EQUIPMENT		TIJA	2016	2026
PRD: VALVE	75 PSI	TIJA	2016	2026
LINING:				
88.B.2 INSPECTION		TIJA	2016	2026
STUB SILL INSPECTION		TIJA	2016	2026

DOT-117R100W Retrofit and Original ID Plates

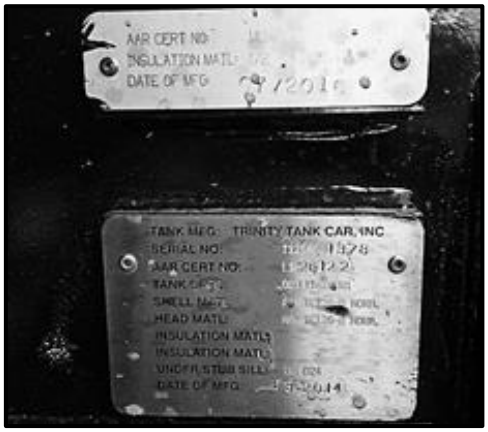

Examples of Nonpressure Tank Car Service Equipment

Single Bolt Manway Covers

"One-Bolt Manway System"
Courtesy of Kelso Technologies, Inc.

"The Duke" Manway
Courtesy of Transquip USA.

Flexible Liquid Eduction Tubes

Courtesy of Kelso Technologies, Inc.

Courtesy of Salco Products, Inc.

Safety Vents (Rupture Disc Devices) and Surge Suppressors

Courtesy of Salco Products, Inc.

Vacuum Relief Valves

Courtesy of Midland
Manufacturing Co.

Courtesy of
Salco Products, Inc.

Courtesy of
Kelso Technologies, Inc.

Reclosing Pressure Relief Valves

(Similar appearing valves may be found on pressure tank cars.)

Courtesy of Midland Manufacturing Co.

“Constant Force Spring” Pressure Relief Valves

Valve with debris/ bee screen

Teflon© coated for corrosive service

Courtesy of Kelso Technologies, Inc.

New-Style Bottom Outlet Valves and Operating Handles

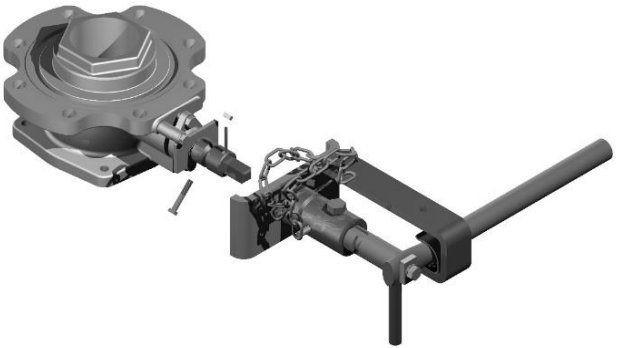

Courtesy of Salco Products, Inc.

Courtesy of Midland Manufacturing Co.

Lined Fittings Manway Plates for Hydrochloric Acid Tank Cars

Courtesy of Salco Products, Inc. Institute

Typical 20- and 22-inch Hydrochloric Acid Manway Fittings Arrangements

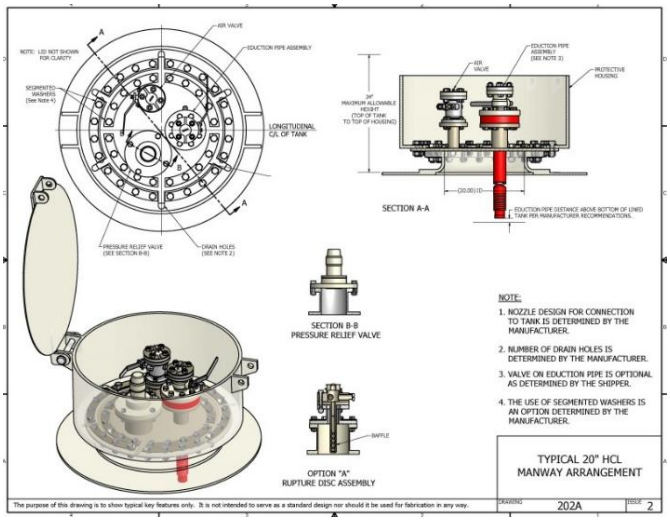

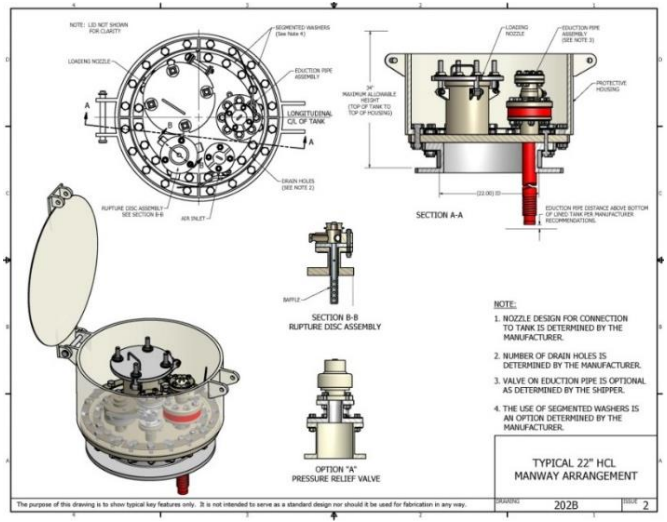

Courtesy of The Chlorine Institute

SECTION 5: PRESSURE TANK CARS

Pressure tank cars, Classes DOT/TC-105, 109, 112, 114, and 120, are used to transport liquefied compressed gases, poison/toxic inhalation hazard (PIH/TIH) materials, reactive materials, and/or corrosive materials requiring the additional protection. There are no equivalent AAR-type pressure tank car specifications.

Minimum tank plate thickness ranges from 1/2 inch to 11/16 inch for steel tanks (depending on tank diameter and tensile strength of the plate used) and 5/8 inch for aluminum. Depending upon the specification, pressue tank cars have burst strengths from 500 psig to 1500 psig.

Class-105 insulated carbon or alloy (stainless) steel or aluminum pressure tank cars are designed for top loading and unloading. Bottom outlets and washouts are prohibited. Tank test pressures range from 100 psig to 600 psig. These cars may be equipped with tank head puncture resistance and thermal protection systems.

Class-109 insulated carbon steel or aluminum pressure tank cars are designed for top loading and unloading. Bottom washouts are authorized; however, bottom outlets are prohibited. Tank test pressures range from 100 psig to 300 psig. There are very few Class -109 tank cars in service.

Class-112 insulated or uninsulated carbon or alloy (stainless) steel pressure tank cars are designed for top loading. Bottom outlets and washouts are prohibited. These cars may be equipped with tank head puncture resistance and wrapped with thermal protection systems. Tank test pressures range from 200 psig to 500 psig.

Class-114 are insulated or uninsulated carbon or alloy (stainless) steel pressure tank cars with tank test pressures of 340 or 400 psig. These cars may be constructed of noncircular cross section, and, except for the PRD, the valves and fittings may be located somewhere other than the top of the tank.

Class-114 cars may be equipped with bottom outlets and washouts, and tank head puncture resistance and thermal protection systems. Currently, those in service are similar in appearance to Class-112 tank cars. No noncircular cross section tank cars are in service.

Class-120 tank cars are insulated steel or aluminum pressure tank cars with tank test pressures of 100 to 500 psig. Like Class-114 tank cars, they may have valves and fittings located somewhere other than the top of the tank and may be equipped with bottom outlets and washouts and tank head puncture resistance and thermal protective systems.

One tank car manufacturer has built a number of specification DOT-120J200W tank cars for the transportation of flammable liquids. These tank cars are similar in appearance to Class-117 tank cars, except the hinged and bolted manway cover is contained within a protective housing. These tank cars operate under a DOT Special Permit and Canadian Safety Permit-Rail. (see page 80).

Pressure tank cars are most readily identifiable by the presence of a protective housing on top of the tank (not to be confused with an expansion dome applied to obsolete nonpressure tank cars).

DOT/TC-120J200W for Flammable Liquid Service

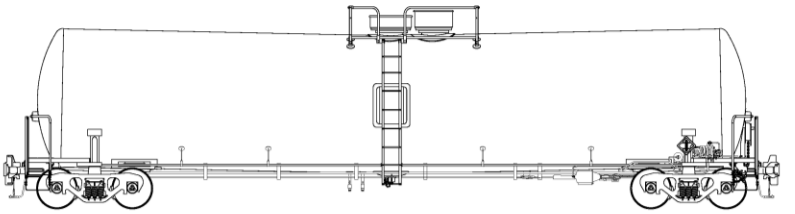

The loading/unloading fittings and the PRD (PRV or combination PRD) will be mounted on a manway cover or pressure plate and enclosed within the protective housing. Some tank cars in refrigerant gas or certain corrosive service may have a bottom outlet, bottom washout, and a hinged and bolted manway cover enclosed within a dome-shaped housing.

Unlike nonpressure tank cars, which may be loaded or unloaded using an open system, pressure tank cars are loaded and unloaded using a closed system; i.e., the tank is not opened to the atmosphere during the process. The manway cover or pressure plate is removed only for maintenance purposes at a tank car repair facility.

Although rare, pressure tank cars may be equipped with heater coil systems.

Typically, in addition to the PRDs, a pressure tank car will have two liquid eduction lines running along the tank's longitudinal centerline with the valves facing the ends with eduction pipes reaching to the bottom of the tank and at least one vapor eduction line with the valve facing the side of the tank car with an eduction pipe extending only into the top of the tank.

The valves for liquid and vapor eduction lines are commonly called angle valves (so called because product flow through the valve is at a right angle to the flow through the eduction line).

The angle valves may be either plug or quarter-turn ball style valves. Instead of angle valves, some pressure tank cars are equipped with ball valves designed for vertical flow of the product.

Depending upon the tank car's service, the following additional fittings may be found mounted on the pressure plate:

- **Sample Line:** may be used to obtain a sample of the tank's lading for laboratory analysis. The device consists of an open pipe extending into the tank that may or may not go to the bottom and is closed with a control (needle) valve on the outside. To obtain a sample, a hose is connected to the control valve's port, with the other end attached to a container for the sample (usually a small compressed gas cylinder). When the control valve is opened, lading will flow into the container.

  The sample line valve may also be used to attach a pressure gauge to determine the pressure within the tank. Because the sample line's pipe may not extend completely to the bottom of the tank, it cannot be relied upon to determine if there is any liquid remaining in an empty tank.

- **Gauging Device:** typically, a magnetic-ball device consisting of a hollow metallic pipe, capped at the end inside the tank. A metallic ball or float equipped with ring magnets is placed around the rod. The inside of the pipe is equipped with a composite-material gauging rod, with a magnet on the lower end. As the tank is filled, the ball floats on the liquid and the magnetic force between the ball and the rod causes the rod to follow the ball, rising with the liquid level. The gauging rod is typically graduated in one-quarter inch increments, and the liquid-level measurement can be converted to gallons of outage (vacant or vapor space in the tank) using outage tables supplied by the tank car's builder. Subtracting the outage from the tank's volumetric capacity will give the "innage" or number of gallons of product inside the tank.

In lieu of a magnetic gauging device, pressure tank cars may be equipped with electronic or "telltale" (also called "dip tube') gauging devices. Telltale gauges consist of a fixed open tube that extends into the tank (but not to the bottom) with an outside control (needle) valve, similar in appearance to the control (needle) valve on a sample line. The length of the tube(s) has been predetermined to typically correspond to 1 percent and/or 2 percent, or up to 5 percent outage by volume. During loading, the control valve(s) are open, and when liquid is emitted, the designated outage has been reached.

- **Thermometer Well:** used to take the temperature of the lading. The device consists of a pipe (sealed at the bottom) filled with an antifreeze solution or oil that extends into the tank and is closed with a cap (not with a valve) on the outside. With the cap removed, a thermometer, which does not travel with the car, is lowered into the tube. The temperature of the liquid in the tube will correspond to the temperature of the lading, which is transferred to the thermometer. The external pipe and/or the thermometer well cap are equipped with telltale holes that are intended to provide a warning should there be a failure of the internal pipe. Some pressure tank cars are equipped with electronic temperature sensing devices.
- **Excess Flow Valves:** required by governmental regulations for certain commodities. An excess flow valve (not to be confused with a check valve that only allows flow in one direction) is a device that closes automatically against the outward flow of the contents of a tank in case the external closure valve is broken off or removed during transit.

  Excess flow valves may be equipped with a bypass feature that allows for pressure equalization. Excess flow valves are neither

designed nor intended to stop the flow of a tank car's contents in the event of a failure of a loading/unloading system's piping or hoses.

For commodities that have a primary or subsidiary hazard of Division 2.1 (flammable gas) material hazard, the interior (eduction) pipes for the loading and unloading valves and sample devices must be equipped with excess flow valves. Tanks transporting chlorine must have excess flow valves or spring-loaded check valves only on the interior (eduction) pipes for the liquid discharge valves. **Note:** See "Enhanced Fittings Package for PIH/TIH Tank Cars" for exceptions.

Although not required by regulation, pressure tank cars transporting other commodities may be equipped with excess flow valves; e.g., a tank car may be in dual service, wherein it transports LPG (Division 2.1) requiring excess flow valves during part of the year and anhydrous ammonia (Division 2.2), which does not require excess flow valves, during other times of the year.

Fittings for the Most Common Commodities Shipped in Pressure Tank Cars

Liquefied Petroleum Gases (e.g., propane, butane, and propylene), vinyl chloride, butadiene, and anhydrous ammonia:

- Two liquid eduction lines along the centerline of the tank with the eduction valves pointing towards the ends of the car.
- One vapor eduction line with the eduction valves pointing to the side of the car.
- Pressure relief valve.
- Thermometer well.
- Sample line.
- Magnetic gauging device.

Chlorine and Sulfur Dioxide:

- Two liquid eduction lines along the centerline of the tank with the eduction valves pointing towards the ends of the car.
- Two vapor eduction lines with the eduction valves pointing to the sides of the car. Tank cars equipped with the enhanced fitting package (see page. 87) may be equipped with one instead of two vapor eduction lines.
- Combination PRD (breaking pin or rupture disc beneath a pressure relief valve).
- No gauging device, sample line, or thermometer well.

Carbon Dioxide and Nitrous Oxide:

- One liquid eduction line with an eduction valve and one vapor eduction line with an eduction valve along the centerline of the tank with the valves pointing towards opposite ends of the car. Typically, these eduction valves will be identified on a plate inside the protective housing or by the letters L (for liquid) and V (for vapor) applied to the interior wall of the protective housing.
- Two pressure regulating valves.
- Pressure relief valve.
- Safety vent/rupture disc device.
- Two or more fixed-length, telltale outage gauges.
- Thermometer well.

Note: Regulations require that the final discharge of the regulating valves, PRV, and rupture disc must be piped to the outside of the protective housing and identified by stenciling "REGULATING VALVES VENTING NORMAL", "RELIEF VALVE", "REGULATING VALVES", and/or "RUPTURE DISC", as appropriate, over or under the discharge pipes from the respective devices. Under no circumstances should these discharge pipes be plugged or otherwise blocked.

DOT/TC-112J340W Tank Car for Liquefied Petroleum Gas and Anhydrous Ammonia Service

33,500 GALLON CAPACITY – NON-INSULATED – THERMAL PROTECTED

DOT-112J340W

For Liquefied Petroleum Gas & Anhydrous Ammonia Service

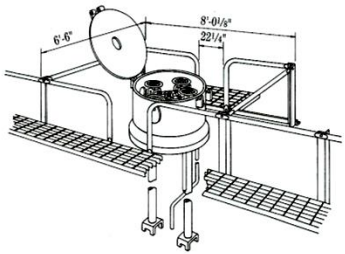

CAPACITY & WEIGHTS

Nominal Capacity @ 58.28% Filling Density – 33,500 gals.

Estimated Light Weight – 99,500 lbs.

Rail Load Limit (100 Ton Trucks) (5'-10" Wheel Base) – 263,000 lbs.

COMMODITY MAXIMUM DENSITY

Truck Cpty.	Wheel Base	Commodity Density
100 Ton	5'-10"	58.28% Max Fill Density

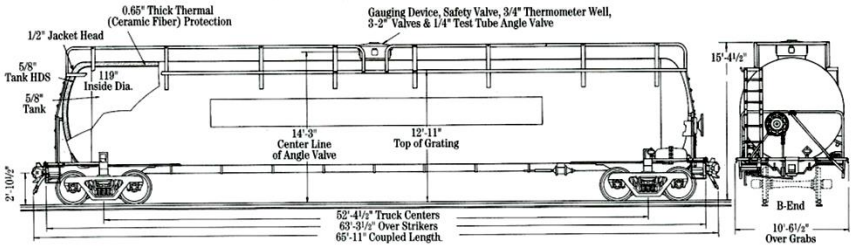

© Copyright, General American Transportation Corporation; reprinted with permission.

Note: Nomenclature used in the illustrations may not always be consistent with that used in the text of the field guide.

Loading and Unloading Arrangement for Liquefied Petroleum Gas and Anhydrous Ammonia Service

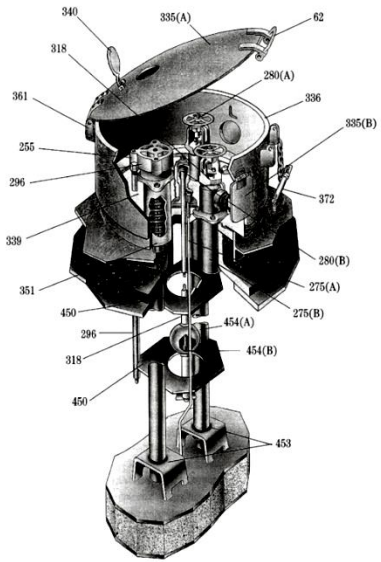

Part No.	Description
62	Bonnet Cover Handle
255	Safety Valve Assembly
275(A)	1/4" Check Valve
275(B)	3" Check Valve
280(A)	2" Angle Valve
280(B)	1/4" Angle Valve
296	Thermometer Well
318	Gauging Device Assembly
335(A)	Manway Bonnet Cover
335(B)	Manway Bonnet Side Cover
336	Manway Bonnet
339	Manway Cover Plate
340	Vent Cover
351	Manway Nozzle
361	Hinge
372	Seal Pin
450	Pipe Bracket
453	Pipe Guide
454(A)	Discharge Pipe
454(B)	Test/Sample Pipe

LOADING AND UNLOADING ARRANGEMENT FOR LIQUEFIED PETROLEUM GASES AND ANHYDROUS AMMONIA CARS WITH THERMAL INSULATION AND MAGNETIC FLOAT TYPE GAUGE DEVICE (POST 1979)

© Copyright, General American Transportation Corporation; reprinted with permission.

DOT/TC-105J500W Tank Car for Chlorine Service

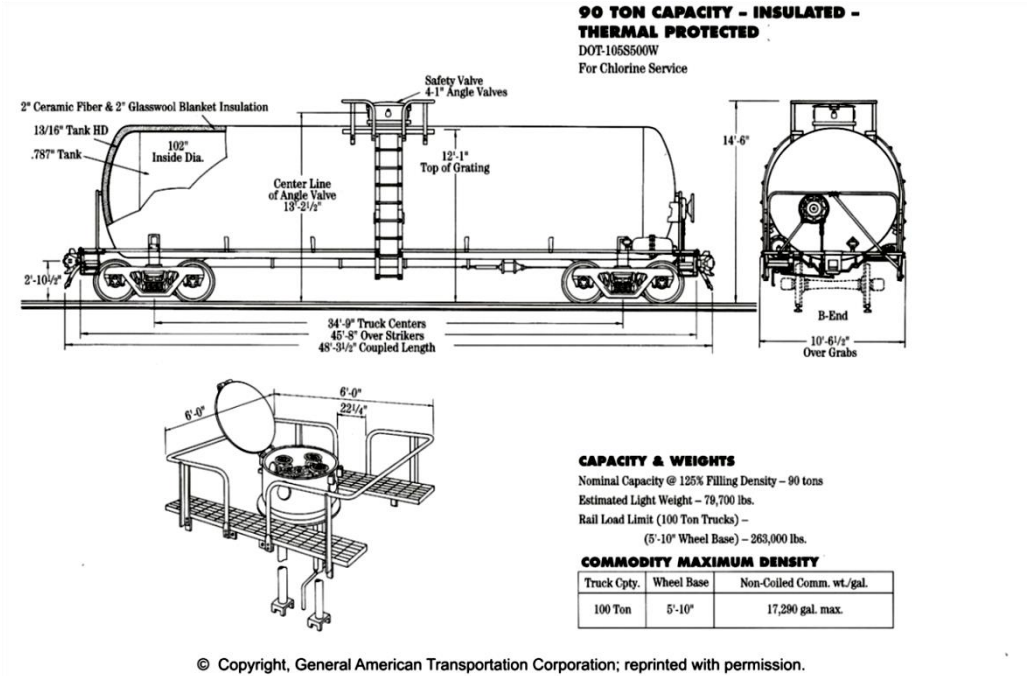

© Copyright, General American Transportation Corporation; reprinted with permission.

Note: As the tank car is equipped with 2" ceramic fiber, the specification is actually "DOT-105J500W".

Typical Chlorine Tank Car Fittings Arrangement

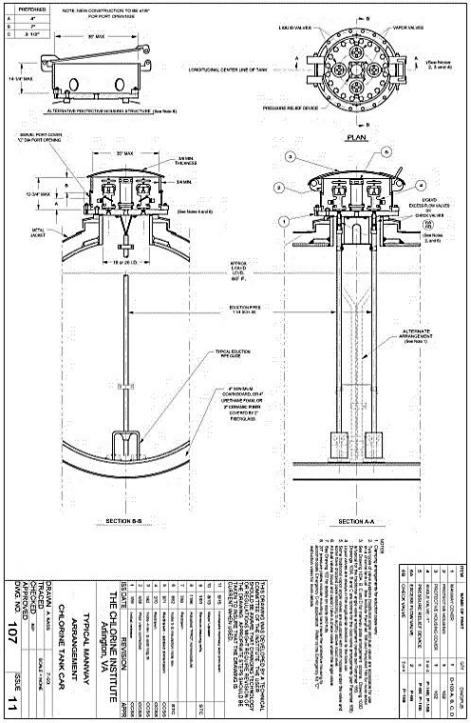

Courtesy of The Chlorine Institute.

DOT/TC-120J200W for Flammable Liquid Service

Photographs courtesy of UTLX Manufacturing.

Magnetic Ball Gauging Device

(May also be found on some nonpressure tank cars.)

Courtesy of Salco Products, Inc.

Pressure Relief Valves That May Be Found on Pressure Tank Cars

"REGO 8890-SERIES"
Courtesy of Transquip USA.

"CROSBY JQ" CHLORINE COMBINATION PRV
Courtesy of Salco Marketing, LLC.

Fittings Arrangement for Carbon Dioxide and Nitrous Oxide Tank Cars

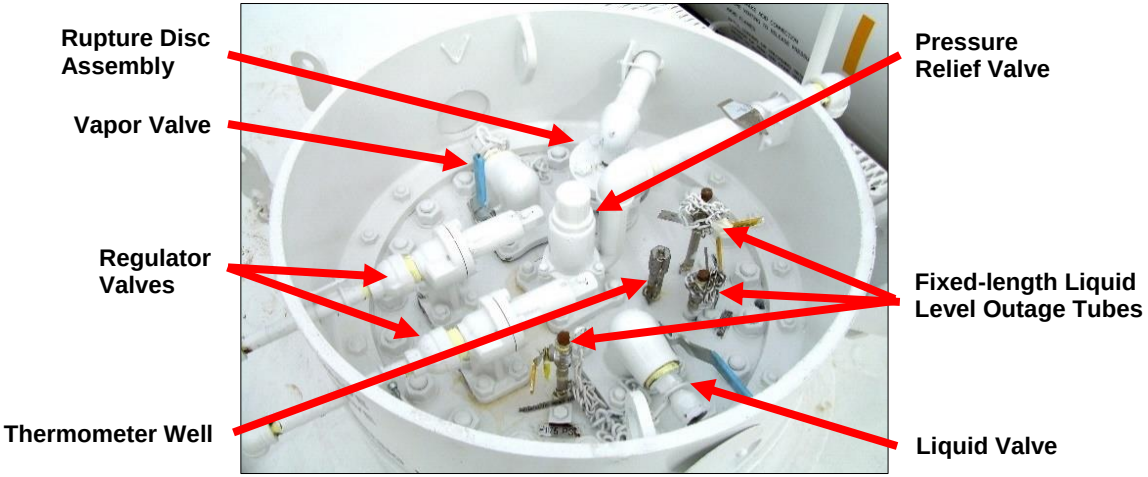

Tank cars transporting Carbon Dioxide and Nitrous Oxide will be stenciled “REGULATING VALVES VENTING NORMAL” on each side of the car.

The venting of vapor from the regulator valves is a normal function to reduce internal pressure through auto-refrigeration. DO NOT attempt to plug the discharge pipes of the pressure relief devices.

Top Fittings Protection Requirements for Tank Cars Transporting Materials Poisonous (Toxic) by Inhalation (PIH/TIH Materials)

As mentioned in Section 1: Tank Car Classification and Specifications, the U. S. DOT issued new rules in January 2009 requiring enhanced safety measures for tank cars transporting PIH/TIH materials.

A tank car built after March 16, 2009, for the transportation of a PIH/TIH material, must have the service equipment enclosed within a protective housing and cover.

In addition, it must be equipped with a top fittings protection system and nozzle capable of sustaining, without failure, a rollover accident at a speed of 9 miles per hour, in which the rolling protective housing strikes a stationary surface assumed to be flat, level, and rigid.

Failure is deemed to occur when the deformed protective housing contacts any of the service equipment, or when the tank retention capability is compromised.

As an alternative to the above top fittings protection, the tank may be equipped with a system that prevents the release of the product from any top fitting in the case of an accident where any fitting would be sheared off (i.e., "Enhanced Fittings Package for PIH/TIH Tank Cars). See the illustrations on pages 87-89 for examples of these devices.

Enhanced Fittings Package for PIH/TIH Tank Cars

A coalition of tank car and valve manufacturers, chemical producers, and railroads researched tank car design criteria to improve transportation safety of PIH/TIH materials, primarily chlorine. This research project was referred to as the "Next Generation Rail Tank Car ("NGRTC" or "Next-Gen") Project".

In addition to added safety features to the tank car structure itself, an enhanced fittings package has been

developed that is designed to prevent the loss of product should any top fittings be damaged or sheared off in an accident. Tank car housings may have some form of marking or labeling indicating that an enhanced fittings package is installed on the car.

The enhanced fittings package differs from traditional chlorine fittings arrangements by:

- Equipping the car with one instead of two vapor lines, in which case the pressure relief valve is relocated from the center of the pressure plate to the side where the second vapor line would have been located.
- Replacing product flow-activated excess flow valves with spring-loaded check valves that are closed when the eduction (angle) valves are closed. When the valve is opened, the valve stem depresses the check valve, allowing liquid or vapor to flow through the eduction pipes; therefore, if an eduction valve is sheared off, the check valve remains closed, preventing the loss of product.
- Replacing the combination PRD (rupture disc/breaking pin assembly below a pressure relief valve contained in one assembly) with a spring-loaded pressure relief valve mounted above a rupture disc assembly that is embedded in the pressure plate. Should the PRD be sheared off, the rupture disc device, being the primary seal, will retain the product.

Enhanced Design for PIH/TIH Tank Cars

Although the NextGen Project came to completion and the enhanced fittings package has been implemented, research continues to enhance PIH/TIH tank car design. Currently, a new chlorine tank car design is operating under a DOT SP-15036 and TC SR-10521.

This design involves a "tank-within-a-tank" concept (referred to as a "sandwich car design") wherein the "outer tank" is only anchored to the "inner" commodity tank at the nozzle, and the bottom of the commodity tank rests on cradles within the outer tank.

The commodity tank has a lower test pressure (300 psig) than a typical chlorine tank car. This tank car design operates with the enhanced fittings package described above.

Courtesy of UTLX Manufacturing.

Enhanced Fittings Arrangement for Chlorine Tank Cars with One Vapor Line

Illustration courtesy of Midland Manufacturing Company.

Cutaway View of Enhanced Fittings Arrangement for Chlorine Tank Cars

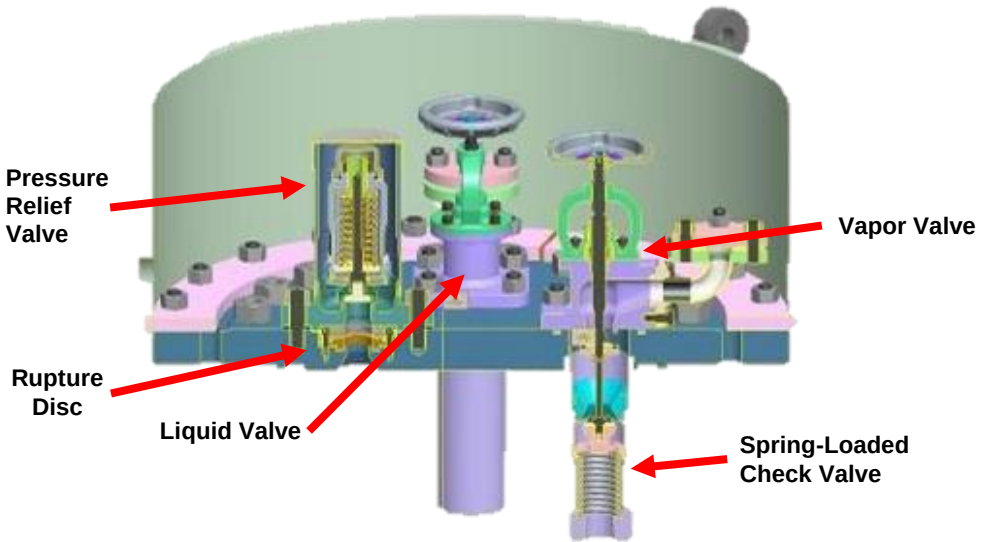

Illustration courtesy of Midland Manufacturing Company.

Enhanced Chlorine Fittings

Rupture Disc Assembly Embedded in the Pressure Plate

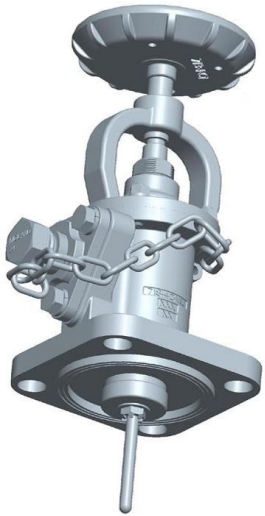

Angle Valve with Stem to Open the Check Valve

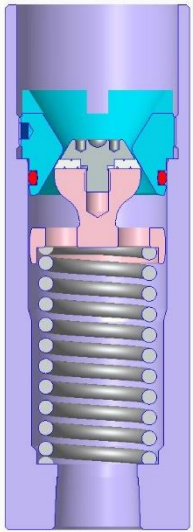

Spring-loaded Check Valve

Illustrations courtesy of Midland Manufacturing Company.

Page intentionally left blank.

SECTION 6: CRYOGENIC LIQUID TANK CARS

Cryogenic liquid tank cars, Class DOT/TC-113 and Class AAR-204, are vacuum-insulated cars having an inner container (tank) and outer shell (tank, not a jacket (although referred to as an "outer jacket" in 49CFR)). The inner tank is constructed of alloy (stainless) steel and the outer shell is constructed of carbon steel. Cryogenic tank cars are designed to transport refrigerated liquefied gases having a boiling point colder than minus 130°F at atmospheric pressure; e.g., liquid hydrogen, ethylene, oxygen, nitrogen, and argon.

The annular space between the inner and outer tanks has a vacuum drawn and is equipped with an insulation system using granular perlite or an alternating wrap of multiple layers of aluminum foil and paper. These tank cars are frequently referred to as Thermos® bottle tank cars.

The insulation system (designed for the commodity being transported and meeting specified performance standards) and vacuum controls the rate of heat input for normal transportation time periods.

Note: DOT regulations require the shipper to notify the Federal Railroad Administration whenever a tank car containing any flammable cryogenic liquid is not received by the consignee within 20 days from date of shipment. Typically, the insulation system will keep the commodity pressure from activating the PRDs for at least double this 20-day period.

Specification DOT/TC-113A60W tank cars have a design service temperature of minus 423°F, a minimum burst pressure of 240 psig, and a tank test pressure of 60 psig.

Specification DOT/TC-113C120W tank cars have a design service temperature of minus 260°F, a minimum burst pressure of 300 psig, and a tank test pressure of 120 psig.

Specification AAR-204W tank cars must meet the specification requirements for Class-113 tank cars, with some exceptions. The minimum required burst strength is 240 psig, with a 60 psig tank test pressure. Specification AAR-204W tank cars are not authorized for Division 2.1 (flammable gas) materials.

Cryogenic liquid tank cars are required to have two liquid-level gauges. One gauge measures the liquid level in the inner tank (this gauge may be a portable gauge that does not move with the car) and the other gauge, a fixed-length dip tube set, indicates the maximum allowable liquid level for the allowable filling density. In addition, the car must be equipped with a vapor-phase pressure gauge to indicate the pressure within the inner tank.

The cars must be equipped with various PRDs for the protection of the tank assembly and piping system. The discharge of the PRD must be directed away from operating personnel, the car structure, trucks, and safety appliances; e.g., steps, handholds/grab irons, and handrails.

The inner tank must be equipped with at least one PRV and at least one safety vent (rupture disc device), which may be replaced by an alternate PRV. The car may also be equipped with a pressure control device (regulator valve) and mixing device to control the routine release of vaporized lading during transportation. Tank cars in liquid hydrogen service must be equipped with a device that will instantly ignite any hydrogen that is discharged through the PRDs. The outer jacket/tank must be equipped with a system to prevent buildup of pressure within the annular space.

The loading/unloading valves and other fittings are required to be enclosed within a protective housing (not to be confused with protective housings on pressure tank cars), which appears to be a box or cabinet. The protective housing(s) is located on both sides, at one end or, in rare cases, on the top of the car. The housing(s) must be adequate to protect the fittings from direct solar radiation, mud, sand, adverse environmental exposure, and mechanical damage incident to normal operation.

The protective housings for the fittings must be equipped with precautionary instructions for the safe operation of the equipment during storage and transfer operations, and must include a diagram of the tank and piping system with the various gauges, control valves, and PRDs clearly identified, and their location indicated. In addition, all valves and gauges must be clearly identified with corrosion-resistant nameplates.

In addition to other stenciling, cryogenic liquid tank cars must be stenciled "DO NOT HUMP OR CUT OFF WHILE IN MOTION" and "VACUUM JACKETED" on both sides in lettering at least 1 1/2 inches high.

Typical Cryogenic Liquid Tank Car (Class DOT/TC-113)

Photo courtesy of Chart Industries.

Typical Cryogenic Liquid Tank Car Fittings Compartment

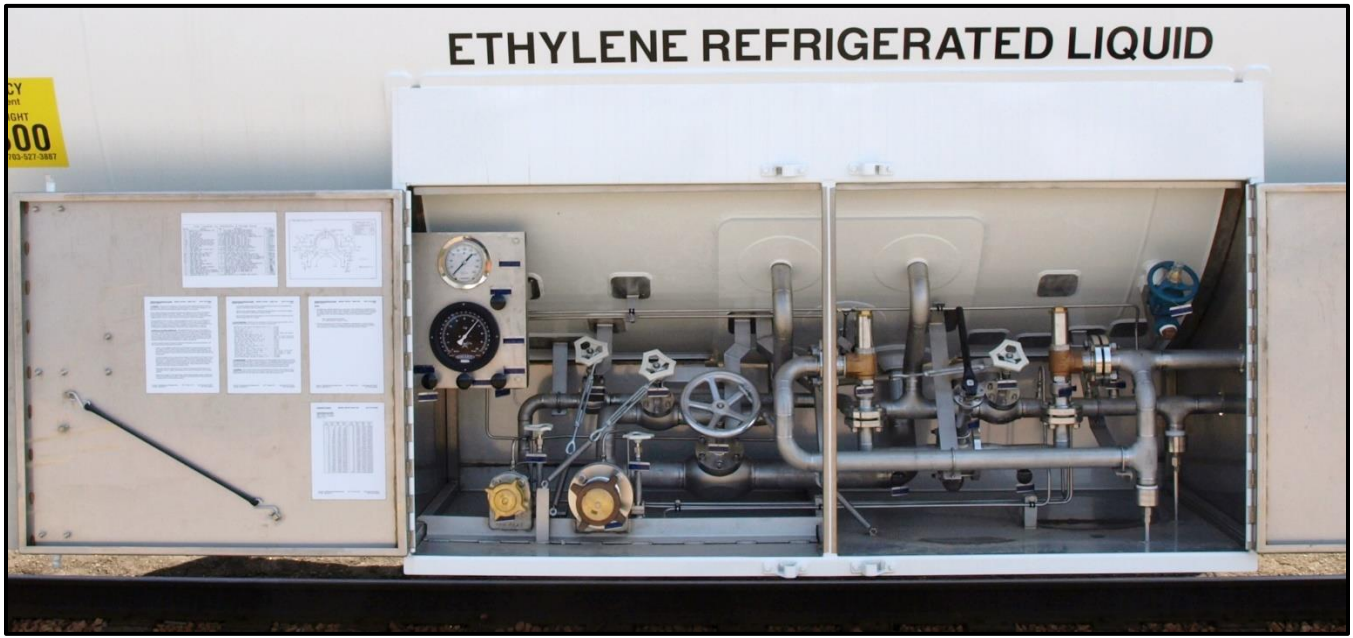

Photo courtesy of Chart Industries.

Cryogenic Liquid Tank Car Fittings Diagram

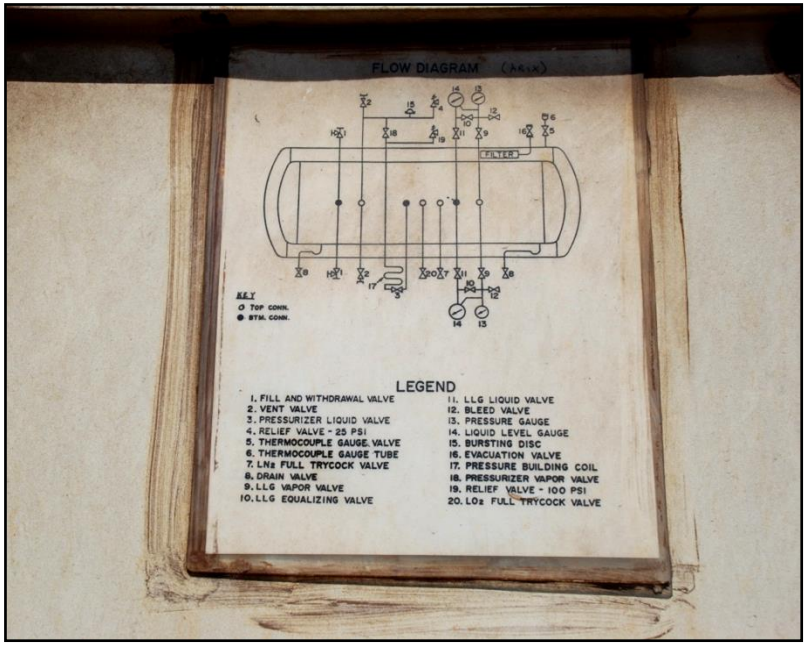

Photo courtesy of Tony Bacino.

SECTION 7: GUIDELINES FOR INITIAL EMERGENCY RESPONSE

Accidents involving tank cars must be evaluated and approached with great care due to the possible presence of hazardous materials/dangerous goods. Absence of visible hazard warning labels, markings, or placards is not a guarantee that commodities involved are harmless. Careful, thorough evaluation, assessment, and initial response are critical to any emergency involving tank cars.

It is possible that an accident involving hazardous materials/dangerous goods will present such a high degree of hazard that the only safe course is to evacuate ALL personnel from the area and allow the incident to run its own course without intervention.

Initial Notification

If you are the first on scene of a transportation accident, your first step is to avoid endangering yourself and call for help. Immediately notify local emergency response personnel and the transportation carrier. After notifying the local emergency response agency, attempt to obtain the shipping papers and call the Emergency Response telephone number shown thereon. You should also contact the railroad directly via its Emergency Telephone Number for emergency response and technical assistance. Numbers for the major carriers are:

- BNSF Railway: 800-832-5452
- Canadian National Railway 800-465-9239
- Canadian Pacific Railway 800-716-9132
- Conrail 856-231-6400
- CSX Transportation 800-232-0144
- Kansas City Southern Railway 877-527-9464
- Norfolk Southern Railway 800-453-2530
- Union Pacific Railroad 888-877-7267

- Railway Association of Canada (RAC): 1-647-206-2896. RAC personnel are available for emergency response and technical assistance at railroad incidents involving dangerous goods in Canada.

AskRail® app

The AskRail® app is a collaborative effort among all North American Class I railroads, the Association of American Railroads, and Railinc Corp. The app is a safety tool that provides first responders immediate access to accurate, timely data about the commodity a railcar is carrying. AskRail® is a backup resource if information from a train crew or train consist is not available. For security reasons, only qualified emergency responders can download and use the restricted features in the AskRail® app. In addition, railroads can offer the app to known emergency responders along their routes. Additional information may be found at: https://askrail.us.

Binoculars are recommended to assist responders in assessing the accident from a safe distance. Provide as much of the following information as you can when calling for assistance.

- Your name, location, and telephone number.
- Location of incident.
- Type vehicle or container involved.
- Wind direction and approximate speed.
- Presence of injured people.
- Presence of smoke, fire, or fumes.
- Presence of markings, labels, or placards on containers or vehicle.
- Carrier name.
- Other pertinent information.

After the initial notification is made, isolate the scene by ensuring all unnecessary personnel are clear of the site. Make sure your vehicle is far enough away that the hot exhaust system does not provide a possible ignition

source. Turn off the vehicle's ignition. Do not smoke or use flares, fusees, or open flames near the scene.

Resist the urge to rush into an accident site and rescue injured personnel until after the commodities are identified and the nature and severity of the hazard is assessed.

Initial Assessment

Remain a safe distance upwind from the site. Use binoculars to survey the site and surrounding area. Make notes and sketches, as necessary. Pay particular attention to:

- Location of injured personnel and their proximity to surrounding hazards.
- Location of potentially threatened personnel.
- Markings, labels, or placards on containers or vehicles that may aid in identifying commodities present.
- Number and types of containers or vehicles involved.
- Visible damage to and/or leakage from containers or vehicles (gas, vapor, liquid, or solid).
- Vehicle or container reporting marks (letters) and number.
- Accessibility to site and possible escape routes.
- Weather conditions.
- Topographical features of the site and surrounding areas, especially bodies of water.

Report the above information directly to other response organizations as soon as possible. When identifying chemical commodities, copy names and other information precisely. Even minor spelling errors can have serious consequences in determining the properties of materials involved.

Identifying Materials

Before entering the incident site, identification of the commodities and containers or vehicles involved is essential. The shipping paper is the best source for this information. For rail carriers, this information is typically contained in a document called a train consist, train list, or wheel report, which is in the possession of a member of the train crew. This information may also be available by contacting the railroad by phone.

The train consist, train list, or wheel report will identify whether the commodity is hazardous and where the car is located in the train. In a rail yard, shipping paper information is available at the yard office.

In the absence of shipping papers, using binoculars from a safe distance upwind, try to locate any 4-digit identification numbers on the placards (or orange panels) applied to the containers or vehicles and/or labels on packages. This may help determine the presence of hazardous materials/dangerous goods.

If shipping papers, placards, markings, or labels are destroyed, the reporting marks and number on the railcar or intermodal container can often be used to help identify the commodities present. Railcar reporting marks are a series of letters (those ending with an X are privately owned; i.e., not owned by a railroad) followed by a series of numbers; e.g., BOEX 123456. Intermodal containers use a similar numbering pattern. Trailers have numbers, but may not have reporting marks. With this information, the carrier will be able to determine the vehicle's contents.

Attempting to retrieve shipping papers or obtain the commodity name from the containers should only be tried if it can be done without undue risk to personnel. Unidentified spilled commodities should be approached with caution. Use the maximum level of personal protective equipment necessary.

Tank Car Damage Assessment

Tank car damage assessment guidelines presented are intended only to allow those first on the scene to make an initial appraisal of railroad tank car tank damage for purposes of determining what actions should be taken until expert appraisal assistance is available.

These guidelines may not be appropriate for assessment of damage to other types of transportation and storage tanks, such as tank trucks, tank trailers, portable tanks, and stationary tanks.

Tank cars and other bulk containers involved in accidents may suffer severe damage without loss of lading. This damage may look impressive, even awesome, yet the car or container may still have sufficient strength to permit it to be carefully removed from the accident site for later transfer or unloading of its contents.

The most serious damage that can occur to tanks and other containers transporting compressed gases is caused by bending, denting, scoring, or gouging without resultant leaks. Time, pressure, and handling can result in delayed rupture.

Virtually all liquefied gases are shipped in tank cars with jackets. Tank damage refers to damage to the tank itself, not to the surrounding jacket. The presence of a jacket may be determined by looking to see if ripped or torn metal reveals insulating materials. The jacket may also be noted by the flashing over the body bolster, flat spots on the sides or ends of tanks, and lap welds. The tank is found beneath the jacket. Removing a jacket to access the tank for damage assessment should only be done under the supervision of railroad personnel.

Assessment of the tank damage is not a casual matter and requires the presence of trained specialists. Each visible dent, score, or gouge must be examined. As adjacent cars or surrounding materials are removed or as the tank car itself is moved, newly exposed surfaces must be examined as well. Dents in combination with scores, gouges, or cracks and dents which cross a weld seam, are

the most dangerous and the tighter or smaller the radius or curve of the dent, the more dangerous it is.

Dents that run lengthwise on the cylindrical section of the tank are usually considered to be more dangerous than large dents in the head. But even large head dents are dangerous, if they appear in conjunction with a gouge, score, or crack. Small head dents not exceeding 12 inches in diameter, especially in tightly bent edges, should be considered marginal and may justify unloading in place, usually by transferring material to another tank car or other container on site rather than attempting to move or rerail it.

Any crack in the base metal of a tank, especially if in combination with a dent or gouge, justifies unloading the tank before it is moved, except as may be necessary to get the valves upright or accessible. Scores or gouges are especially dangerous if they run lengthwise over a distance of 7 feet, cross a weld on the tank, and are greater than 1/16 inch in depth.

To repeat, assessment of tank damage is a skill that requires training and experience. Factors include evaluation of damage to the tank itself, outside air temperature, material in the tank and its vapor pressure, and the internal pressure. In the event of a spill and/or fire, refer to the EVACUATION section of the applicable Guide(s) (orange page) contained in the *Emergency Response Guidebook*.

When fire, especially a torch-like flame, impinges on a tank, a high-volume hose stream directed at the point of flame contact may prevent a dangerous heat and pressure buildup in the tank. Torch fires occur when a tank has been punctured or the pressure relief valve functions as well as other sources where flammable gas is burning out of the opening in a strongly projecting flame. With this kind of fire, a large standoff distance is required, and unmanned monitor nozzles provide greater protection for responders than hand lines.

Situations where flooding with water may be inappropriate occur when the water temperature is higher than the temperature of the material in the tank. This is often the case during winter months. Additional factors to consider before attempting to cool a tank with water include the tank's construction (may be insulated and covered with a jacket), the supply of water, possible environmental damage from contaminated runoff, and ground saturation, which may prevent heavy equipment from entering the site to perform wreck clearing operations.

A water attack is almost never the first thing that emergency responders should attempt. The guidelines in this section, especially those relating to the initial notification, making an initial survey, collecting and interpreting hazard and response information, and reviewing the tank damage noted, should be followed prior to laying, charging, and using hose lines.

Page intentionally left blank

SECTION 8: GLOSSARY OF RAILROAD AND TANK CAR TERMS

AAR — the Association of American Railroads, a trade association comprised of North American railroads. The AAR, among other activities, issues specifications and rules regarding the interchange of railcars between the various railroads. The AAR's requirements for tank cars are contained in the AAR *Manual of Standards and Recommended Practices* (MSRP) C-III, Specification M-1002.

AAR Specification Tank Car — a tank car built, altered, or converted in accordance with the tank car specifications of the Association of American Railroads.

A-end — the end of a railcar, opposite the end equipped with the hand brake (see B-end.)

Ambient — the temperature and barometric pressure of the local environment.

B-end — the end of a railcar on which the hand brake is attached. If both ends of the railcar have a hand brake, the car will be stenciled "A-END" and "B-END". When facing the B-end, the sides of the railcar are identified as the Right Side and Left Side, respectively.

Body Bolster — the structural members at each end of a car body that support the car on its truck assemblies.

Bottom Outlet Valve — a valve located in the bottom of the tank for loading or unloading.

Bottom Washout — a plugged and flanged opening in the bottom of a tank to facilitate cleaning of a tank car that does not have a bottom outlet.

Brake Rigging — the assembly of cylinders, levers, and/or rods under a railcar that provides and transmits braking action to the wheels.

Breather Vent — a device having an operating part that is a permeable disc or a disc having a breather hole or slit. Breather vents are typically applied to tank cars transporting hydrogen peroxide to allow vapors created by the decomposition of the commodity to be vented from the tank.

Burst Pressure — the value of the inlet static pressure at which a rupture disc device or breaking-pin device functions.

Burst Pressure (Tank) — the internal pressure at which a tank will theoretically burst. For a tank car tank, the minimum burst pressure is based on the tank's inside diameter, welding joint efficiency, minimum tensile strength of the plate material, and the minimum thickness of the plate after forming.

CANUTEC — acronym for the Canadian Transport Emergency Centre. CANUTEC is operated by the Transport of Dangerous Goods Directorate of Transport Canada and provides a national bilingual (English and French) advisory service, including emergency response advice for incidents involving dangerous goods. Call collect at 613-996-6666 (24 hours) or *666 cellular (Canada only). Call 613-992-4624 (24 hours) for nonemergency inquiries.

Capacity/CAPY — the volumetric capacity (stenciled in gallons and liters) of a tank car's tank. The capacity may also be shown in imperial gallons.

Center Sill — the center longitudinal structural member of a car underframe that forms the backbone of the underframe and transmits most of the buffering shocks from one end of the car to the other (also see Stub Sill Tank Car).

Check Valve — a valve that automatically closes to stop the flow of liquid or vapor in one direction. A spring-loaded check valve has its valve maintained in the closed position by a spring and is opened by the valve above it.

CHEMTREC® — acronym for the Chemical Transportation Emergency Center, a 24-hour emergency response service that provides assistance in the handling of incidents involving hazardous materials/dangerous goods. Call toll free at 800-424-9300 in the U.S. and Canada (outside calls: collect at 703-527-3887).

C-Kit/Capping Kit — a set of components used to cap (cover) and contain leakage from a fitting on a tank car. C-Kits are specifically designed for use on chlorine and sulfur dioxide tank cars. Tank cars built or altered after December 1, 2003, and used for the transportation of Class 2 (gases) or Poison-Inhalation Hazard/Toxic Inhalation Hazard materials must have a manway cover (or pressure plate) designed to accommodate capping kits. This requirement does not apply to tanks cars transporting carbon dioxide or Class DOT/TC-113 and Specification AAR-204W cryogenic liquid tank cars.

Clad/Cladding — the bonding of dissimilar metal sheets to form a composite material. The more corrosion-resistant metal acts as an interior protective coating after a tank car tank is fabricated.

Class (Tank Car) — a general designation of tank cars, usually including several specifications; e.g., Class DOT/TC-117 or Class AAR-204. The word "Class" is used if the designation embraces several specifications.

Closure — a device that closes an opening into a tank, valve or fitting. Examples: pipe plugs, quick-disconnect caps, blind flanges, manway covers, outlet caps, eduction pipe caps and fill hole covers.

Combination Pressure Relief Device — a PRD that incorporates a nonreclosing device (breaking pin or rupture disc assembly) in conjunction with an outboard reclosing pressure relief valve.

Commodity/Lading — the product inside a tank car.

Coupler Vertical Restraint System — see "Double-Shelf Coupler" definition.

Cryogenic Liquid Tank Car — a vacuum-insulated tank car, consisting of an inner alloy (stainless) steel container (tank) enclosed within an outer carbon shell (tank, not jacket), designed for the transportation of refrigerated liquefied gases such as liquid hydrogen, oxygen, ethylene, nitrogen, and argon. These cars are built to the specifications contained in Subpart F, Part 179, 49CFR, for Class DOT-113 tank cars; Section 8.6 of TC14877E for Class TC-113 tank cars; and Chapter 3 of the AAR Specifications for Tank Cars for Class AAR-204 tank cars. Cryogenic liquids are defined by:

- U. S.: 49CFR: "A refrigerated liquefied gas having a boiling point colder than -130°F (-90°C) at atmospheric pressure"; and
- Canada: TC TP 14877E: "A refrigerated liquefied gas that is handled or transported at a temperature equal to or less than -100°C (-148°F)".

DOT — acronym for the Department of Transportation, which is the governmental department that regulates the transportation of hazardous materials within the United States.

DOT/TC Specification Tank Car — the U. S. Department of Transportation or Transport Canada specification to which a tank car was built, altered, or converted.

Double-Shelf Coupler/Coupler Vertical Restraint System — a railcar coupler having top and bottom shelves designed to prevent vertical disengagement of mating couplers in the event of an excessive speed end-to-end impact or derailment. Double-shelf couplers are fully compatible with all other railcar couplers and required by DOT regulation on all DOT specification tank cars and any tank car transporting hazardous materials/dangerous goods.

Eduction Line — the combination of the eduction valve and eduction pipe.

Eduction Pipe — the pipe that runs from the eduction valve into the tank.

Eduction Valve — a valve used to load or unload liquid product or to introduce or remove vapor from a tank car tank.

Excess Flow Valve — a device installed in a liquid, vapor, or sample line, or a gauging device rod designed to stop the outward flow of product in the event the fitting is removed during transportation, such as the device being sheared off during an accident. When not in operation, the device allows the flow of liquid or vapor in two directions. Do not confuse this valve with a check valve, which is a device that allows the flow of liquid or vapor in only one direction.

Expansion Dome (Dome) — a cylindrical metal enclosure located on top of an obsolete nonpressure tank car tank intended to function as the expansion area for the lading during transportation. Do not confuse an expansion dome with protective housing, which is found on pressure tank cars and some nonpressure tank cars.

Fill Hole — an opening in the manway cover, closed with a fill-hole cover, through which product may be loaded or unloaded. Typically found on tank cars in sulfuric or hydrochloric acid service.

Fitting — a pressure retaining part that is in contact with the lading and has no operating components, made of one or more pieces, that joins service equipment to the tank car tank or joins two pieces of service equipment.

Flange — a disc-shaped device that is part of a nozzle or fitting (valve, PRD), used to create a bolted attachment to the tank car. Also, it may be a solid disc (blind flange) or have a threaded hole for a plug or secondary valve bolted to the eduction valve to provide closure.

Gasket — material inserted in the joint between two mating surfaces to prevent leakage through the joint.

Gauging Device — a piece of equipment or a device used to measure the level of liquid or vapor space in a tank car tank, which may be a fixed gauge bar/outage scale or T-bar attached to the top of the tank below the manway nozzle (in nonpressure tank cars), or a magnetic-ball, fixed-length (telltale) tube, or an electronic device.

Hand Brake — A device mounted on railcars and locomotives to provide a means for applying brakes manually without air pressure. Common types include vertical wheel, horizontal wheel, and lever type, so-named because of the configuration or orientation of their operating handles.

Head — one of the ellipsoidal ends of a tank car tank.

Head Shield — A method of providing tank head puncture-resistance by mounting a metal shield on the end of a tank car to protect against punctures from the coupler of another railcar. Head shields may be separate attachments or may be incorporated into a tank's jacket.

Heel — common term used for the product or residue remaining in a tank car tank after it has been unloaded.

Insulation — a material, typically fiberglass or foam, enclosed within a metal jacket, used to maintain or moderate the temperature of the lading during transportation. For cryogenic liquid tank cars, in addition to a vacuum and insulation system, either perlite or an alternating wrap of multiple layers of aluminum foil and paper is used. Not all tank cars are insulated. Do not confuse insulation with thermal protection.

Internal Valve — a type of bottom outlet valve located inside a tank car tank to prevent damage in the event of an accident.

Jacket — a metal covering (minimal thickness of 11 gauge) surrounding a tank car tank designed to protect and secure the insulation and/or thermal protection systems on a tank car. A jacket is not an outer tank.

Lading — the commodity being transported**.**

Light Weight/LT WT — empty weight or tare weight of a rail car. The light weight is stenciled in pounds and kilograms on every rail freight car and is abbreviated LT WT.

Liquid Eduction Line — a pipe, equipped with a valve, cap, or blind flange closure that extends to the bottom of a tank car tank for the loading and unloading of the lading.

Load Limit/LD LMT — the maximum weight of lading that can be loaded in a railcar. Load limit is stenciled in pounds and kilograms on every rail freight car and is abbreviated LD LMT.

Manway — a general term designating the circular-shaped opening located at the top of a tank car tank to allow access into the tank's interior for maintenance, inspection, and loading or unloading. Depending upon a tank car's class or product service, the manway will be closed with either a hinged and bolted manway cover (typical for nonpressure tank cars) or a semi-permanently bolted manway cover or pressure plate, typical for pressure and cryogenic liquid tank cars.

Nitrogen Blanket/Nitrogen Pad — nitrogen gas inserted into a tank car tank to provide an inert atmosphere for a lading that may react with air in order to protect the lading's purity or to prevent the entry of moisture.

Nonpressure Tank Car — a tank car with a tank test pressure of 60 or 100 psig, built to the specifications contained in Subpart D, Part 179, Title 49CFR or Chapter 3, AAR *Manual of Standards and Recommended Practices*, Section C-III, Specification M-1002. Nonpressure tank cars are also referred to as "general service" or "low-pressure" tank cars in the *2016 Emergency Response Guidebook*.

Normalized Steel — steel plate that has been heated and held at elevated temperatures (usually 1600 to 1700°F) followed by still-air or forced-air cooling. Normalization is a kind of heat treatment that

relieves stress on steel and improves ductility and toughness.

Nozzle — a circular or oval-shaped attachment applied to openings in a tank for the application of a manway cover (or pressure plate), valves, pressure relief devices, and other fittings.

Outage — the vacant space left in a tank car tank after filling to allow for product expansion during transportation so it will not reach shell-full capacity (maximum volume of a tank). Governmental regulations prescribe minimum outages for hazardous materials/dangerous goods at specified reference temperatures. In addition to minimum outage by volume, tank cars may not be loaded by weight in excess of their gross weight on rail limit as determined by their truck capacity. Another term for outage is ullage.

Packing — a general term denoting the various substances and devices used to prevent leakage of fluids or gases through openings (valve body and valve stem) that cannot be closed by ordinary contact of the parts concerned.

Packing Gland — the portion(s) of a device used to contain packing on a valve body or other fitting to prevent leakage.

PIH/TIH (Poison/Toxic Inhalation Hazard) — a gas or liquid that meets the definition of a "material poisonous by inhalation" as defined in §171.8, Title 49 CFR (see TIH).

Pressure Plate — on a pressure tank car, the circular-shaped steel plate closing the manway nozzle to which the valves, pressure relief device(s), and other fittings are mounted. Some nonpressure tank cars may be equipped with a pressure plate assembly in lieu of a hinged and bolted manway cover.

Pressure Relief Device (PRD) — a fitting that opens at a predetermined setting to reduce the pressure within a tank car tank resulting from exposure to abnormal conditions. PRDs may be reclosing (spring-loaded)

pressure relief valves, regulating valves, nonreclosing rupture disc devices/safety vents, or a combination device (incorporating both a rupture disc/breaking pin and a reclosing pressure relief valve).

Pressure Relief Valve (PRV) — a reclosing spring-loaded device, actuated by inlet static pressure, that relieves excess pressure and recloses after normal conditions are restored. "Pressure relief valve" has replaced the term "safety relief valve".

Pressure Tank Car — a tank car with a tank test pressure of 100 to 500 psig built to the specifications contained in Subpart C, Part 179, Title 49CFR.

Protective Housing — on pressure and some nonpressure tank cars, a heavy, circular steel housing that surrounds the fittings to protect them in the event of an accident and from unauthorized access. Nonpressure tank cars may be equipped with light-gauge steel protective housings (referred to as combination housings, breadboxes, or mailboxes) that provide weather and tamper protection. Do not confuse with an expansion dome as found on some (obsolete) nonpressure tank cars. The protective housings for cryogenic liquid tank cars are boxes or cabinets on the sides or end of the tank car.

Regulating (Regulator) Valve — a reclosing (spring-loaded) pressure relief device applied to tank cars transporting certain refrigerated liquids (e.g., carbon dioxide and argon) to maintain internal pressure below a certain point. If the pressure exceeds a specific point, the valve will open, releasing vapor, which results in auto-refrigeration, lowering the product's temperature and pressure.

Reporting Mark and Number — the alphabetic initial stenciled (typically 3 or 4 letters ending with an X for nonrailroad owned cars, followed by 1 to 6 numerals; e.g., BOEX 2017) on the sides and ends of every freight car to identify the railroad or private car line that owns the car. Reporting marks are assigned by the Association of American Railroads.

Residue — the amount of commodity remaining in a tank car after it has been unloaded to the maximum extent practicable. Also referred to as "the heel".

Rupture Disc — the operating part of a rupture disc device/safety vent. When used in combination with a spring-loaded reclosing pressure relief valve, the device is called a combination pressure relief device. (Replaces the term "frangible disc".

Rupture Disc Device — a nonreclosing pressure relief device actuated by inlet static pressure and designed to function by the bursting of a rupture disc. These devices are also referred to as "safety vents" by DOT and TC. (see Safety Vent.)

Safety Relief Valve — See Pressure Relief Valve. Pressure relief valve has replaced the term safety relief valve.

Safety Systems — thermal protection, insulation, tank head puncture-resistance, coupler vertical-restraint and systems used to protect discontinuities and service equipment; e.g., skid protection and protective housings.

Safety Vent — a nonreclosing pressure relief device utilizing a rupture disc. The term is synonymous with "rupture disc device" (AAR) and is a term used by DOT and TC. (See Rupture Disc Device.)

Sample Line — a pipe (typically 1/4 inch in diameter), equipped with a control valve that extends to near the bottom of a tank car tank for drawing a sample of the lading.

Shell — the cylindrical section of a tank car tank, without heads. Do not confuse with jacket. (See Tank Car and Head.)

Service Equipment — equipment used for filling, sampling, emptying, venting, vacuum relief, pressure relief, heating (if internal to the tank), lading temperature measurement, or measuring the amount of lading within the tank. Commonly referred to as valves and fittings.

SETIQ — acronym for the Mexican Emergency Transportation System for the Chemical Industry, a service of the National Association of Chemical Industries (ANIQ). Responders in the Mexican Republic can call SETIQ (24 hours) 01-800-00-214-00. In Mexico City and the metropolitan area, call 5559-1588. Elsewhere call, call +52-55-5559-1588.

Shipping Paper (Hazardous Materials/Dangerous Goods) — a shipping order, bill of lading, manifest, waybill, or other shipping document serving a similar purpose and containing the information required by governmental regulations.

Skid Protection — a device attached to the bottom of a tank car to protect the bottom outlet, washout and/or sump (referred to as bottom discontinuities) from damage in the event of a derailment.

Specification — the specific designation within a tank car class; e.g., DOT-111A100W2.

STC Code or STCC — abbreviation for Standard Transportation Commodity Code, which is a 7-digit freight description coding system used by the North American railroad industry. For hazardous materials/dangerous goods, the STCC is referred to as the Hazmat Code, and begins with 49 or 48 for hazardous wastes. The Hazmat Code may be found on shipping papers and may be used to access computer-based emergency response information.

Stenciling — a term used to describe all forms of lettering on cars regardless of the actual method of application. Specific information that is required to be marked on the exterior surface of a tank car.

Stub Sill Tank Car — a tank car design with draft sills at each end of the tank instead of a continuous center sill that utilizes the tank as part of the car structure. (Also see Center Sill.)

Stuffing Box — the portion of a top-operated bottom outlet valve assembly through which the valve operating

rod passes to the exterior of the tank. The stuffing box contains packing that, when compressed by the packing gland nut, forms a seal around the rod to prevent leakage and keeps the rod from vibrating. The stuffing box cover, when removed and inverted, is used as a wrench to open and close the internal valve.

Sump or Siphon Bowl — a small depression located near the longitudinal center of a tank bottom where the liquid eduction line extends, thereby allowing the maximum amount of product to be removed from the tank.

Surge Pressure Reduction Device — a device designed to reduce the internal surge pressures of the pressure relief devices. These devices are primarily used on tank cars equipped with nonreclosing pressure relief devices (safety vents) and are intended to reduce pressure surges that can cause the rupture disc to fail.

Tank Car/Tank Car Tank — a railcar that has a tank for its body for transporting liquids, solids, and liquefied gases, consisting of a shell and heads together with connections welded directly to it. In accordance with AAR specifications, "tank" means "tank car tank". The head of a tank is one of the end closures. Tank cars may be pressure or nonpressure and are often equipped with special equipment to enhance their usefulness for handling specific commodities. For pressure class tank cars, the tank includes the manway nozzle as well. Note: Tanker or tanker car are inappropriate terms to describe a tank car.

Tank Test Pressure — the pressure (psig) at which a tank car tank is to be hydrostatically tested at the time of construction. Depending upon the specification, the tank test pressure varies from 20 percent to 40 percent of the minimum burst pressure. Tank test pressure is also known as service pressure.

TC or Transport Canada — the governmental agency that regulates the transportation of dangerous goods in Canada.

Thermal Protection — a material or system applied to tank car tanks to limit the transfer of heat to the tank in the event of exposure to pool or torch fires. It is intended to reduce the likelihood of tank failure under such conditions. Thermal protection is not the same as insulation, which is intended to maintain or moderate lading temperature under ambient conditions. Per 49CFR, a thermal protection system must have sufficient thermal resistance so there will be no release of any lading within a tank car, except through the pressure relief device, when subjected to:

- A pool fire for 100 minutes; and/or,
- A torch fire for 30 minutes.

Thermometer Well — a small diameter pipe, usually 3/4 inch, filled with an antifreeze solution or oil that extends into the tank and is closed at the top with a removable cap. The temperature of the lading transfers to the liquid in the pipe. A thermometer or probe is lowered into the pipe to obtain the lading's temperature.

TIH/PIH (Toxic/Poison Inhalation Hazard) — a gas or liquid that meets the definition of a "material poisonous by inhalation" as defined in §171.8, Title 49 CFR (see PIH).

Train Consist — for purposes here, a document (also referred to as a Train List or Wheel Report) that sequentially lists the location of each railcar in a train. A consist may also serve as the shipping paper for a railcar containing hazardous materials/dangerous goods, provided it contains all of the information required by governmental regulations.

Truck — the assembly of wheels, axles, roller bearings, springs, side bearings, side frames, and bolster that supports each end of a railcar and enables it to move on the rails.

Type (Tank Car) — for tank cars, designates the approving authority (DOT, TC, or AAR). Preferred usage is, for example, "DOT tank cars".

Vacuum Relief Valve — a spring-loaded valve mounted at the top of some nonpressure tank cars, designed to open and allow air into the tank if an excessive vacuum is formed that may cause the tank to collapse. A vacuum relief valve should not be depressed to determine if there is pressure in the tank. Doing so may dislodge the sealing component causing the device to leak vapor or liquid.

Valves — A device attached to a tank car tank designed to control the flow of lading into and out of the tank. Purposes include, but are not limited to: measure fluid pressure and temperature, sample fluids in the tank, detect or determine liquid levels, or relieve over-pressures for the purposes of emergency relief or temperature control.

Vapor Line — a pipe equipped with a valve, cap, or blind flange closure that extends to the top of the tank through which vapor is introduced or removed during loading or unloading. On a nonpressure tank car, this device is usually called an air line and is used to introduce compressed air or vapor, or an inert gas to unload the car.

Vapor Space — the space in a tank above the liquid; may also be referred to as outage.

ANNEX A: AAR, U.S. DOT, AND TRANSPORT CANADA SAFETY ENHANCEMENTS FOR NONPRESSURE TANK CARS

Note: The intent of this Annex is to provide a historical time line of the various rule changes regarding the transportation of ethanol and crude oil by tank car.

AAR-INITIATED SAFETY ENHANCEMENTS FOR NONPRESSURE TANK CARS

Top Fittings Protection for Tank Cars in Sulfuric Acid Service.

With certain exceptions, nonpressure tank cars ordered new after June 10, 2010, are required to have top-fitted service equipment protection. Top fittings protection is typically met by the installation of a protective device or structure.

Top Fittings Protection for Tank Cars Used to Transport Packing Group I and II Materials.

For protection of top fittings against rollovers and accidental horizontal loads, all new nonpressure Class DOT/TC tank cars ordered after July 1, 2010, used to transport all Packing Group I and II materials, are required to have top fitting protection. Currently, there are no requirements to retrofit existing tank cars (refer to the following "DOT Regulations for Tank Cars in High-Hazard Flammable Train Service" regarding tank cars transporting Class 3 (flammable liquids).

Tank Cars Built for the Transportation of Class 3 (Flammable Liquids).

In September 2011, the AAR published, via Casualty Prevention Circular (CPC) 1232, new requirements in Chapter 2 of the AAR Specifications for Tank Cars for tank cars built for the transportation of Class 3 (flammable liquids) Packing Group I and II, with the proper shipping names of "Petroleum Crude Oil", "Alcohols, n.o.s.", and "Ethanol and Gasoline Mixture".

Class-111 tank cars ordered after October 1, 2011, are required to comply with the following requirements:

1) Top Fittings Protection: Must have top fittings protection per Appendix E; typically met by enclosing the fittings within a protective housing.

2) Pressure Relief Devices (PRDs): Must be equipped with reclosing pressure relief devices. Upon approval by DOT's Pipeline and Hazardous Materials Administration (PHMSA), a non-reclosing device can be used where the applicant demonstrates that a non-reclosing device is required and affords an equivalent level of safety.

3) Tank Material: Heads and shells must be constructed of normalized TC128 Grade B steel or normalized ASTM A516-70 steel. Tank heads must be normalized after forming. The AAR Executive Director of Tank Car Safety may approve non-normalization after forming if a facility has demonstrated that its equipment and controls provide an equivalent level of safety.

4) Tank Thickness:

   - Tanks constructed of normalized TC128 Grade B steel:
     - Non-jacketed tanks must be at least 1/2-inch thick; and
     - Jacketed tanks must be at least 7/16-inch thick.

- Tanks constructed of normalized ASTM A516-70 steel:
  - Non-jacketed tanks must be at least 5/8-inch thick; and
  - Jacketed tanks must be at least 1/2-inch thick.

  In all cases, the cars must be equipped with at least 1/2-inch-thick half-head shields.

- Tanks constructed of alloy (stainless) steel (DOT-111****W6 and DOT 111****W7):
  - Non-jacketed tanks must have heads and shells at least 1/2-inch thick and be equipped with 1/2-inch-thick half-head shields, and
  - Jacketed tanks must be at least 7/16-inch thick and equipped with, at a minimum, 1/2-inch- thick jacket heads.

Tank cars built to meet the above requirements are referred to as "CPC-1232 tank cars". Tank cars built prior to the CPC-1232 standards being used to transport the above commodities are commonly referred to as "legacy tank cars".

U.S. DOT REGULATIONS FOR TANK CARS IN CLASS 3 (FLAMMABLE LIQUID) SERVICE

Tank Cars in "High-Hazard Flammable Train Service"

On May 8, 2015, the Department of Transportation established a new tank car specification, "DOT 117A100W" to be utilized for the transportation of all Class 3 (flammable liquids) (not just Crude Oil and certain Alcohols (Ethanol), as covered by AAR's CPC-1232). The rule also published a phase-out schedule for the use of existing Class DOT-111 (a/k/a "legacy tank cars") and those CPC-1232 tank cars.

Excerpted from Title 49CFR:

§171.8: High-hazard flammable train (HHFT): a single train transporting:

- 20 or more loaded tank cars of Class 3 (flammable liquids) in a continuous block, or;
- 35 or more loaded tank cars of a Class 3 (flammable liquids) throughout the train consist.

High-hazard flammable unit train (HHFUT): a single train transporting 70 or more loaded tank cars containing Class 3 (flammable liquids).

§§173.241(a), 173.242(a), and 173.243(a): Bulk packaging requirements. DOT-111 tank cars and DOT-111 tank cars built to the AAR's CPC-1232 industry standard are no longer authorized to transport Class 3 (flammable liquids) in high-hazard flammable train service, unless retrofitted to DOT-117R retrofit standards, or meet the DOT-117P performance standards prescribed by §179.202-12.

DOT-111 tank cars and DOT-111 CPC-1232 tank cars are no longer authorized for use in high-hazard flammable train service unless retrofitted prior to the dates shown in the following table:

DOT Phase-Out Dates for DOT-111 and DOT-111 CP-1232 Tank Cars in High-Hazard Flammable Train Service *(May 8, 2015; superseded by FAST Act on August 15, 2016 – see page 128)*

PACKING GROUP	DOT 111 NOT AUTHORIZED ON OR AFTER:	DOT 111 CPC-1232 NOT AUTHORIZED ON OR AFTER:
I	January 1, 2018 – Non-jacketed	April 1, 2020 – Non-jacketed
	March 1, 2018 - Jacketed	May 1, 2025 - Jacketed
II	May 1, 2023 – Jacketed and Non-jacketed	July 1, 2023 – Non-jacketed
		May 1, 2025 - Jacketed
III	May 1, 2025	May 1, 2025

§179.202: Specification requirements for DOT-117 tank car tanks:

- Plate thickness: Minimum 9/16 inch, AAR TC-128, Grade B normalized steel.

- Tank head puncture resistance: Full-height head shields at least 1/2-inch thick.
- Thermal protection system: Conforming to §179.18, and include a reclosing pressure relief device.
- Jacket: Minimum 11 gauge of A1011 steel, or equivalent. Insulation is optional.
- Bottom outlet: If equipped, the handle must be removed prior to train movement, or be designed with protection safety system(s) to prevent unintended actuation during accident scenarios.
- Top fittings protection: Top fittings protection conforming to Appendix E of the AAR Specifications for Tank Cars.
- ECP (Electronically Controlled Pneumatic) brakes: By January 1, 2021, a high-hazard flammable unit train having at least one PG I Class 3 material, and operating in excess of 30 mph, must be equipped with ECP brakes. By May 1, 2023, other high-hazard flammable unit trains operating in excess of 30 mph must be equipped with ECP brakes. Alternative brake systems may be submitted to the DOT for approval.

Note: The U. S. Government Accountability Office (GAO) is facilitating a study to determine the viability of ECP brakes.

§179.202-13: Retrofit standard requirements for DOT-117R. Existing DOT-111, including CPC-1232, tanks may be retrofitted to DOT-117 requirements provided:

- Plate thickness: The wall thickness after forming of the tank shell and heads must be, at a minimum, 7/16 inch and constructed with steel authorized by the DOT regulations at the time of construction (differs from DOT-117A specification).
- Tank head puncture resistance: Full-height head shields at least 1/2-inch thick (same as DOT-117A).
- Thermal protection system: Conforming to §179.18 and include a reclosing pressure relief device (same as DOT-117A).

- Jacket: Minimum 11 gauge of A1011 steel, or equivalent (same as DOT-117A). Insulation is optional. (same as DOT-117A).
- Bottom outlet: If equipped, the handle must be removed prior to train movement, or be designed with protection safety system(s) to prevent unintended actuation during accident scenarios (same as DOT-117A).
- Top fittings protection: Existing tank car tanks may continue to rely on the equipment installed at the time of manufacture (same as DOT-117A).

- ECP (Electronically Controlled Pneumatic) brakes: By January 1, 2021, a high-hazard flammable unit train having at least one PG I Class 3 material, and operating in excess of 30 mph, must be equipped with ECP brakes. By May 1, 2023, other high-hazard flammable unit trains operating in excess of 30 mph. must be equipped with ECP brakes. Alternative brake systems may be submitted to the DOT for approval (same as DOT-117A).

Tank car specification markings:

- DOT-117 tank cars are built to the specification "DOT-117A100W"; however, as jacketed thermal protection is required, they will be stenciled "DOT-117J100W".
- Existing Class-111 and CPC-1232 tank cars that are retrofitted will be stenciled "DOT-117R100W".
- Existing Class-111 and CPC-1232 tank cars that meet the performance standards specified in §179.202-12 will be stenciled "DOT-117P100W".

Note: The DOT-117A100W specification does not include a numeral following the letter "W" as prescribed for other Class DOT-111A nonpressure tank cars (i.e., "1" – "7").

Transportation of Flammable Liquids by Rail (excerpted from "Fixing America's Surface Transportation Act") (a/k/a "FAST Act" – October 1, 2015 – signed into law on December 4, 2015)

The "FAST Act" revised the May 8, 2015, DOT rulemaking for Tank Cars in High-Hazard Flammable Train Service to include all Class 3 (flammable liquids) materials transported by rail (not just those transported in a high-hazard flammable train (HHFT) or a high-hazard flammable unit train (HHFUT)).

§7304: Phase-out of all Tank Cars Used to Transport Class 3 (Flammable Liquids)

- Except as provided in subsection (b), beginning on 10/1/2015, all DOT-111 specification railroad tank cars used to transport Class 3 (flammable liquids) shall meet the DOT-117, DOT-117P, or DOT-117R specifications in Part 179 of Title 49, CFR, regardless of train composition.
- Phase-out schedule: As of 10/1/2015, certain tank cars not meeting DOT-117, DOT-117P, or DOT-117R specifications may be used regardless of train composition, until the end-dates shown in the table to the right: (Superseded by FAST Act August 15, 2016.)

DOT Phase-Out Dates for Non-DOT-117 Tank Cars in Class 3 (Flammable Liquids) Service *(10/1/2015)*

COMMODITY	TANK CAR	END-DATE
Class 3 Unrefined Petroleum Products, including Crude Oil	Non-jacketed DOT-111	January 1, 2018
	Jacketed DOT-111	March 1, 2018
	Non-jacketed CPC-1232	April 1, 2020
	Jacketed CPC-1232	May 1, 2025
Ethanol	Non-jacketed and jacketed DOT-111	May 1, 2023
	Non-jacketed CPC-1232	July 1, 2023
	Jacketed CPC-1232	May 1, 2025
Other Class 3 (Flammable Liquids) – Packing Group I	DOT-111 and CPC-1232	May 1, 2025
Other Class 3 (Flammable Liquids) – Packing Groups II and III	DOT-111 and CPC-1232	May 1, 2029

§7305 Thermal Blankets: DOT-117 and non-jacketed tank cars modified to meet the DOT-117R specification must be equipped with an insulating thermal blanket at least 1/2 inch thick.

§7306: Minimum Requirements for Top Fittings Protection for DOT-117 Tank Cars:

(a) Protective Housing - Except as provided in (b) and (c), top fittings on DOT-117R tank cars shall be located inside a protective housing not less than 1/2-inch thick; and

(1) Shall be as tall as the tallest valve or fitting involved and the height of a valve or fitting within the protective housing must be kept to the minimum compatible with their operation.

(2) The protective housing or cover may not reduce the flow capacity of the pressure relief device below the minimum required.

(3) The protective housing shall provide a means of drainage with a minimum flow area equivalent to 6-inch diameter holes.

(4) When connected to the nozzle or fittings cover plate, and subject to a horizontal force applied perpendicular to, and uniformly over, the projected plane of the housing, the tensile connection strength of the housing shall be designed to be:

(A) no greater than 70% of the nozzle to tank tensile connection strength;

(B) no greater than 70% of the cover plate to nozzle connection strength; and

(C) no less than either 40% of the nozzle to tank connection strength or the shear strength of twenty 1/2-inch bolts.

(b) Pressure Relief Devices (PRD):

(1) The PRD shall be located inside the protective housing, unless space does not permit. If multiple PRDs are utilized, no more than one may be located outside of the housing.

(2) The highest point of any PRD located outside of the housing may not be more than 12 inches above the tank jacket.

(3) The highest point on the closure of any unused PRD nozzle may not be more than 6 inches above the tank jacket.

(c) Alternative Protection: As an alternative to the protective housing requirements, a tank car may be equipped with a system that prevents the release of product from any top fitting in the case of an incident where the top fitting would be sheared off.

"Fast Act" Requirements for Flammable Liquids and Rail Tank Cars

On August 10, 2016, the Department of Transportation issued Final Rule HM-251C to codify certain mandates and minimum requirements of the "FAST Act" into Title 49CFR. The table on the following page summarizes the DOT phase-out of non-DOT 117 tank cars in Class 3 (flammable liquids) service:

In addition, 49CFR, Part 179, Specifications for Tank Cars, was revised to include the "FAST Act" requirements applicable to DOT Specification 117A, 117P and 117R tank cars.

DOT Phase-Out Dates for Non-DOT-117 Tank Cars in Class 3 (Flammable Liquids) *(as of 08/15/2016)*

Material	Jacketed or Non-jacketed Tank Cars	DOT-111 not authorized on or after:	DOT-111 CPC-1232 not authorized on or after:
Unrefined petroleum products – Class 3, PG I (e.g., Crude Oil)	Non-jacketed	January 1, 2018	April 1, 2020
	Jacketed	March 1, 2018	May 1, 2025
Class 3, PG I (flammable liquid), other than unrefined petroleum products	Non-jacketed	May 1, 2025	May 1, 2025
	Jacketed	May 1, 2025	May 1, 2025
Unrefined petroleum product – Class 3, PG II or PG III (flammable liquid)	Non-jacketed	January 1, 2018	April 1, 2020
	Jacketed	March 1, 2018	May 1, 2025
Ethanol	Non-jacketed	May 1, 2023	July 1, 2023
	Jacketed	May 1, 2023	May 1, 2025
Class 3, PG II or PG III (flammable liquid) other than unrefined petroleum products or ethanol (see above)	Non-jacketed	May 1, 2029	May 1, 2029
	Jacketed	May 1, 2029	May 1, 2029

TRANSPORT CANADA REGULATIONS FOR TANK CARS

Transport Canada Protective Direction No. 34

Issued April 23, 2014, Protective Direction (PD) No. 34 required owners to identify and report to Transport Canada each CTC (Canadian Transport Commission) 111, DOT 111 and AAR 211 stub sill tank cars with certain construction characteristics (non-normalized ASTM A515 Grade 70 steel shell material; not having exterior heater coils; and, not having bottom-shell continuous reinforcement).

Subject tank cars cannot be offered for transport or transported in Canada. In addition, these tank cars are required to be marked "Do not load with dangerous goods in Canada/Ne pas charger de merchandises dangereuses au Canada", or similar words to that effect. On May 2, 2014, AAR issued CPC-1281 requiring such marking to be placed on both sides of the tank car adjacent to the car number on a stencil or decal measuring approximately 10 1/2 by 20 1/2 inches (see sample to the lower left).

DO NOT LOAD WITH DANGEROUS GOODS IN CANADA

NE PAS CHARGER DE MERCHANDISES DANGEREUSES AU CANADA

TC-117 Tank Cars for Flammable Liquids

On May 1, 2015, the Transportation of Dangerous Goods (TDG) Regulations were amended to incorporate a TC-117 tank car specification for the transport of flammable liquids. The TC-117 specification, including TC-117P and TC-117R, is equivalent to DOT-117, DOT-117P, and DOT-117R tank cars; however, all TC-117 tank cars are not required to be equipped with ECP (Electronically Controlled Pneumatic) brakes.

As of October 1, 2015, TC-117 tank cars are the only nonpressure tank cars permitted to be built for flammable liquid service. TC/DOT-111 tank cars manufactured before October 1, 2015, (including CPC-1232 tank cars) may be retrofitted for continued use for the transport of flammable liquids. Such tank cars will be designated as TC-117R. Per Transport Canada Protective Order 37, issued June 6, 2016, the retrofit

requirements, including application of a protective housing around the service equipment mounted on the manway cover plate, are the same as the retrofit requirements for DOT-117R tank cars under the United States' "FAST Act".

Transport Canada has published a phase-out schedule for tank cars transporting flammable liquids:

Transport Canada Protective Direction No. 38

On July 13, 2016, Protective Direction 38 was issued to accelerate the phase-out of jacketed and non-jacketed "legacy" (non-CPC-1232) DOT-111 tank cars from being used to transport Crude Oil in Canada as of November 1, 2016. Prior to PD 38, the cut-off dates for Crude Oil were May 1, 2017, for DOT-111 non-jacketed tank cars and March 1, 2018 for jacketed tank cars.

Transport Canada Phase-Out Schedule for Tank Cars Transporting Class 3 (Flammable Liquids)

Cut-off Date	Flammable Liquid/Packing Group	TC/DOT-111 removed from service
November 1, 2016	Crude Oil, PG I, II, and III	Non-CPC-1232, non-jacketed "Legacy tank cars"
November 1, 2016	Crude Oil, PG I, II, and III	Non-CPC-1232, jacketed "Legacy tank cars"
April 1, 2020	Crude Oil, PG I, II, and III	CPC-1232, non-jacketed
May 1, 2023	Ethanol, PG II	Non-CPC-1232, non-jacketed; non-CPC-1232, jacketed
July 1, 2023	Ethanol, PG II	CPC-1232, non-jacketed
May 1, 2025	Crude Oil and Ethanol, PG I, II, and III	CPC-1232, jacketed*
May 1, 2025	All other flammable Liquids, PG I, II and III	Non-CPC, non-jacketed; non-CPC, jacketed; CPC-1232, non-jacketed; CPC-1232, jacketed*

*Most jacketed CPC-1232 tank cars will meet the requirements of TC-117R, with minor changes, if any.

BACK COVER (INSIDE)

Field Guide To Tank Cars